L801 Pro User Guide

Version 1.1

Copyright © 2026 Afinia Label. All rights reserved.

Trademarks

Firefox is a trademark of the Mozilla Foundation.

Intel and Intel Core are trademarks of Intel Corporation in the U.S. and/or other countries. Java and Oracle are registered trademarks of Oracle and/or its affiliates.

Microsoft, Windows, and Windows Server are registered trademarks of Microsoft Corporation in the U.S.A. and/or other countries.

Memjet is a trademark of Memjet Ltd.

FCC

This device complies with Part 15 of the FCC rules. Operation is subject to the following two conditions: (1) This device may not cause harmful interference, and (2) this device must accept any interference received, including interference that may cause undesired operation.

Contents

Safety Precautions....6
Installation....6
Power Supply....6
Printer Usage....7
Using the Printer....8
Parts of the Printer....8
In the Box....9
Setup....10
Install the ink cartridges....12
Install printhead....13
Install the printer driver....15
Using the Touch Control Panel....18
Configure restricted functions....21
Choosing Label Media....22
Print Diagnostic Page....23
Loading Label Media....24
Printing Labels....26
Change Default Settings in Printer Driver....26
Select the Media Type....28
Adjust Alignment for Printing....28
Printing Borderless (Full-Bleed) labels....29
Adjustments for Borderless printing....29
Saving Custom Media Size Settings....31
Export Custom Media Size Settings....31
Import Custom Media Size Settings....31
Turning Off the Printer....32
If the Printer Will Not Switch Off....32
Managing Printer Security (Administrator)....33
Change Password....33
Embedded Web Server (EWS)....35
Advanced Settings....38
Other Support Tools....42
L801 Pro Human-Machine Interface (HMI)....43

Introduction 43
System Overview 43
Home Screen 43
Screen Layout 43
Printer Status Indicators 44
Real-Time Clock (RTC) 44
Printhead replacement Alert 45
Self-Help Video Access 45
Re-print Menu 45
Reprint Procedure 45
Printing Behavior 46
Print Dialog and Control Options 46
Maintenance Menu 47
Printhead Cleaning 47
Component Replacement 47
System Setup 48
Language Settings 48
Network Settings 48
Device Information 48
Advanced Settings (Administrator Access Required) 49
Offset adjustments (X/Y alignment) 49
Security 49
Diagnostics 50
Firmware Updates 50
Historical Logs 50
Metrics 51
Bottom Panel Functions 51
Ink Level Indicators 51
Quick Action Controls 51
Preventive Maintenance Alerts 52
Alert Indicators 52
Self-Help Video Library 53
Troubleshooting (Overview) 53
Printer Maintenance 54

Guidelines for Preventive Maintenance 54
Replacing an Ink Cartridge 56
Cleaning the Printhead 57
Replacing the Printhead 57
Opening/Closing the Clamshell 60
Opening the Clamshell 60
Closing the Clamshell 60
Cleaning Debris from the Cutting Zone 61
Cleaning the Sensors 61
Replacing the Output Module/Cutter Assembly 63
Removal 63
Replace Cutter Assembly 64
Installation 65
Replacing the Service Station 66
Removal 66
Installation 68
Replace the Transfer Wiper 69
Replacing the Aerosol Fan Filter 70
Replacing the Waste Ink Absorber 72
Troubleshooting 73
If Error Messages Appear 73
Troubleshoot Printer Setup 75
Poor Print Quality or Incorrect Printout 76
Other Printing Problems 78
Clearing a Media Jam 79
Clearing Clogged Ink Nozzles 79
Adjusting Sensor Sensitivity 81
Appendix 82
System Requirements 82
Printer Interface (GPIO) Specifications 82
Regulatory Information 84
Technical Support 85

Safety Precautions

Electrical Shock Hazard

Do not disassemble any part of your printer. There are no user-repairable parts inside the printer. Disassembly of any part of the printer will void all warranties.

Fire Hazard

Keep the printer well away from all heat sources and flammable substances.

Switch your printer off immediately and unplug the power cord from the wall socket if you notice any of the following:

- Smoke is rising from the printer.
- An acrid smell is coming from the printer.
- Sparks are being emitted from the printer. Contact your supplier as soon as possible.

WARNING: Hazardous Moving Parts

Keep fingers and other body parts away from the printer.

Installation

- Install the printer on a flat, level surface. The printer must remain level at all times. Tilting the printer may cause excessive ink leakage and affect performance and print quality.
- Avoid wide temperature variations. Install the printer in a protected location away from direct sunlight, open windows, and other areas subject to temperature extremes.

Power Supply

Input Rating	100-240 VAC, 2.4A-1.0A, 50/60 Hz; 200 Watts Max
Operating Temperature	15ºC to 35ºC

- Always use the Power button on the touchscreen panel to turn the printer off. Removing power to the printer in any other way may damage it.
- Use only the supplied power cord.
- Use of any other power supplies or cords may damage the printer and void your warranty.

Printer Usage

- **Ensure adequate ventilation for the printer.**
  Blocking ventilation openings around the printer may cause it to overheat and become damaged.

- **Keep liquids and heavy objects away from the printer.**
  Heavy objects may warp the outer shell, damaging the printer. Liquids may discolor or damage the skin and, if they penetrate it, may irreparably damage the printer.

- **Use only authorized consumables.**
  Use of any printhead other than authorized Memjet technology printheads will damage the printer and void your warranty. The use of unauthorized inks or ink cartridges may damage the printer and void your warranty.

- **Clear media jams promptly.**
  To avoid further problems, promptly attend to all media jams and any other causes of printer failure.

- If you are moving the printer, allow sufficient time after installation for the temperature and humidity of the internals of the printer to arrive at equilibrium with the surroundings.

Using the Printer

Parts of the Printer

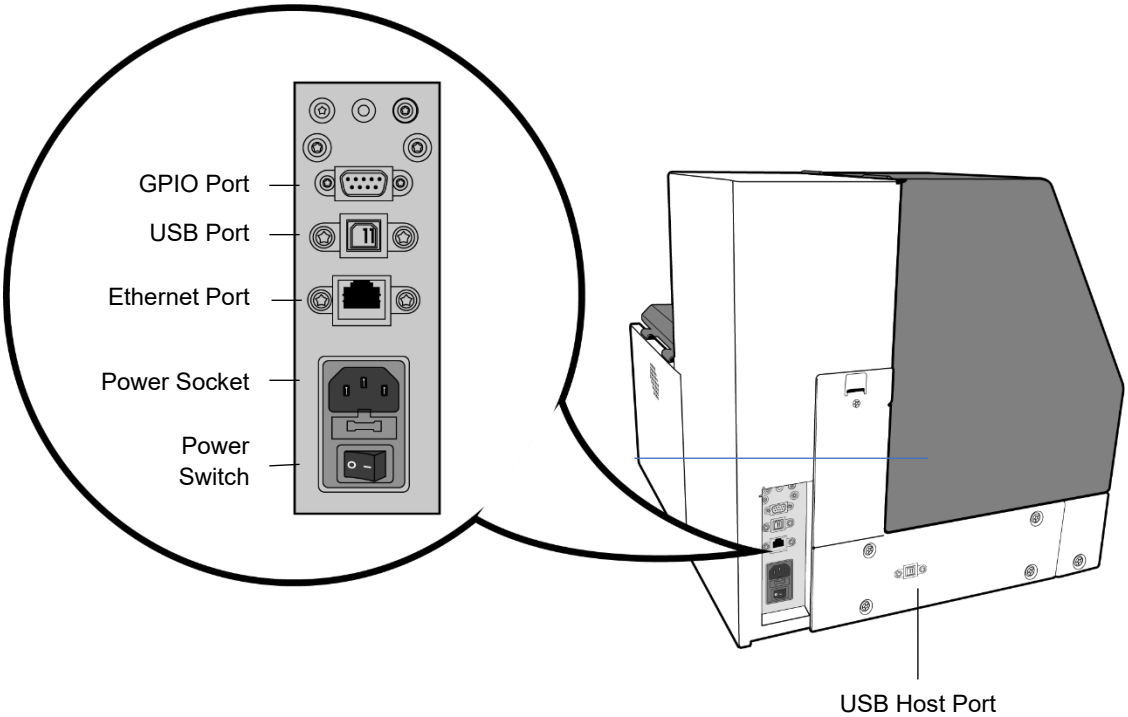

In the Box

Included items:

Printer
Power Cord
USB Cable
Network Cable
Sample Label Roll
Printhead
Set of inks – CMYKK

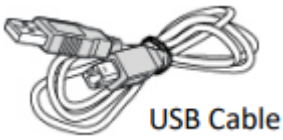

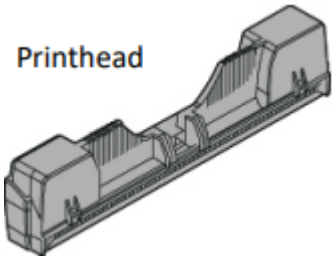

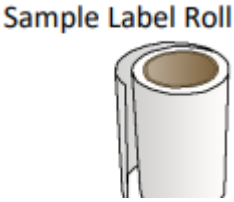

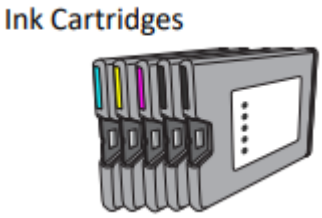

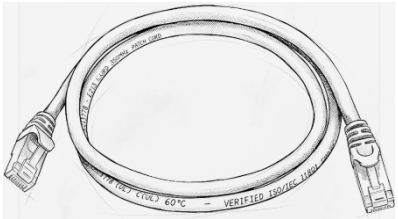

Network Cable

Setup

Remove tape and packing materials.

Remove tape:

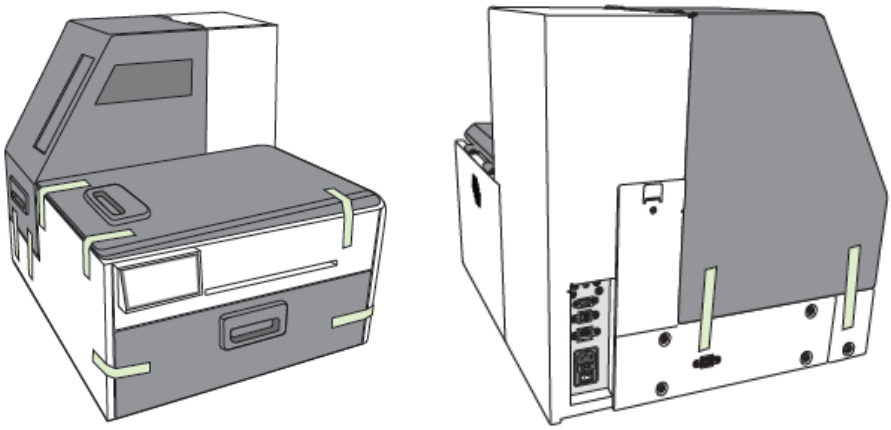

Remove tape and foam

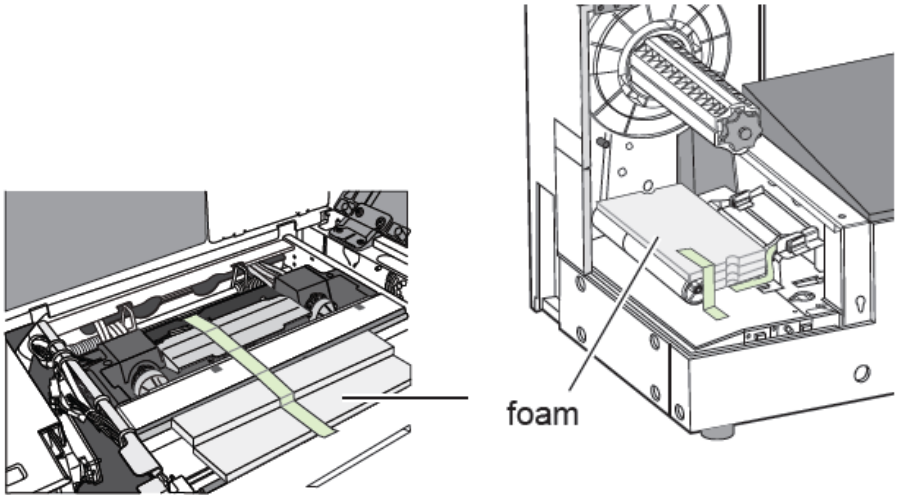

Remove cardboard insert

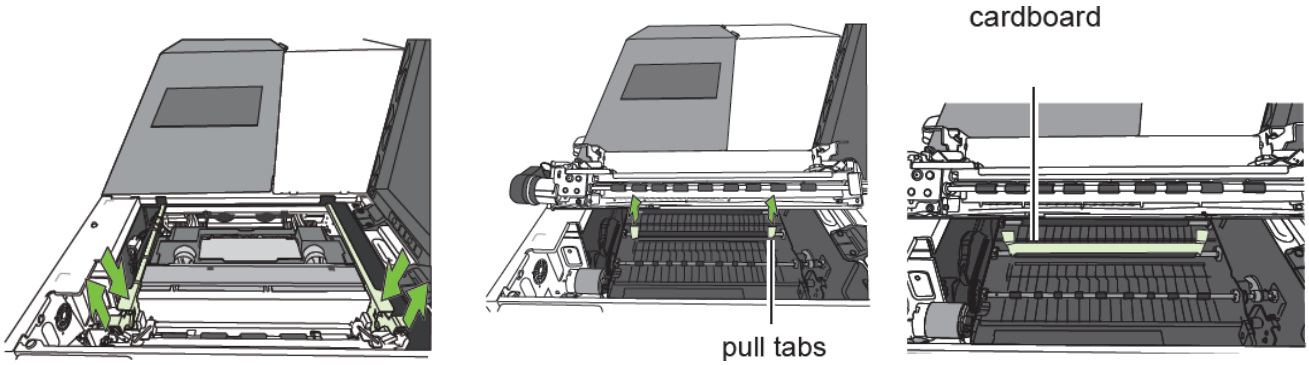

Connect power

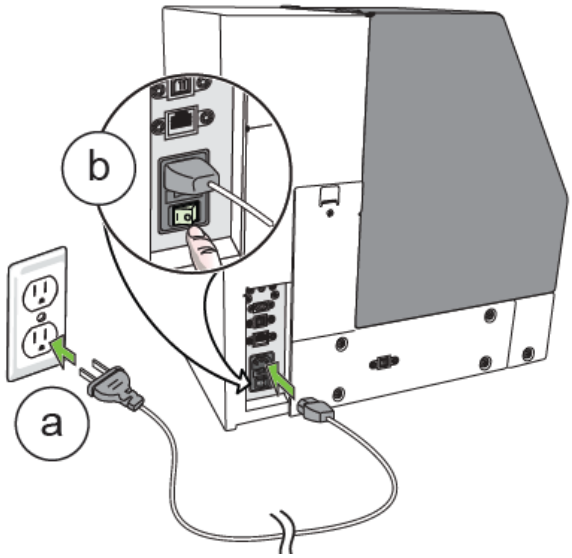

Press and hold power button for 3 seconds

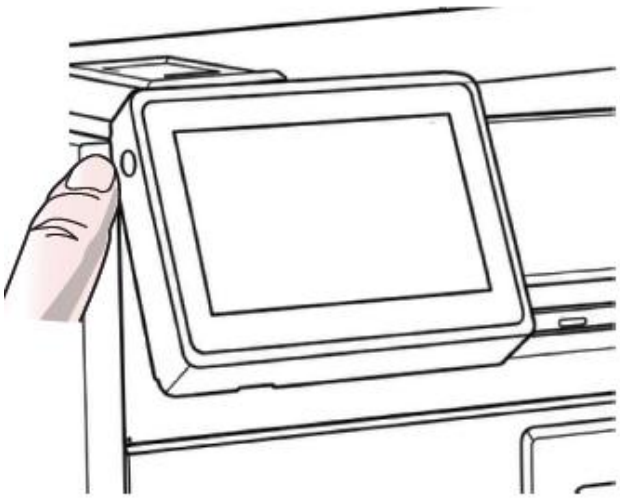

Choose the display language by pressing the System Setup button

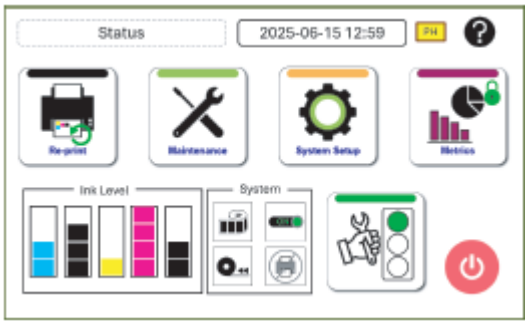

Select the language button

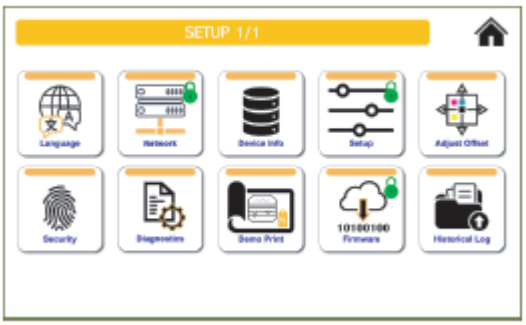

Select the language

Install the ink cartridges

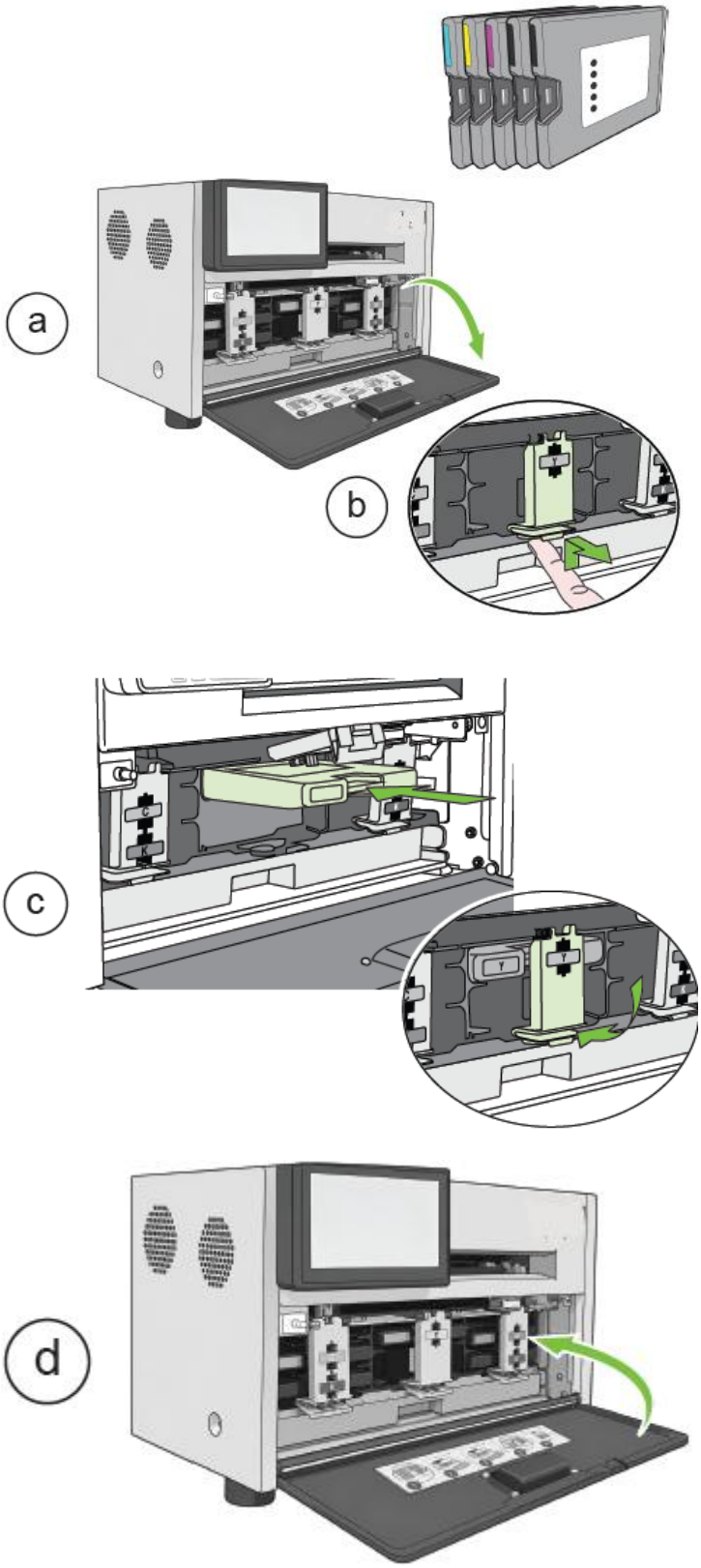

Install printhead

Open the top cover

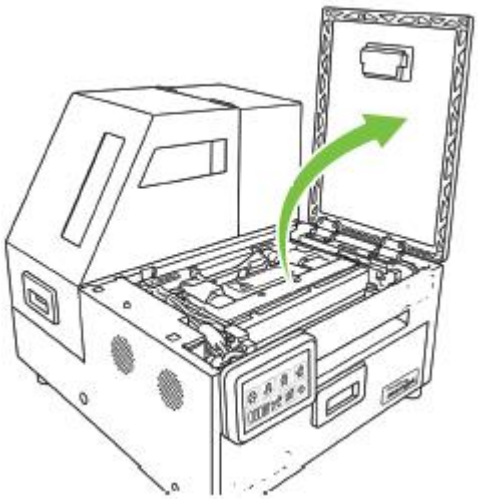

Select the Maintenance button

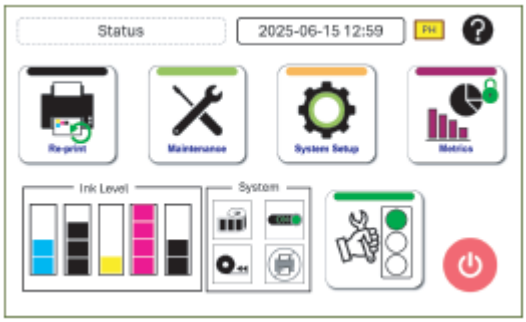

Select the Eject Printhead button

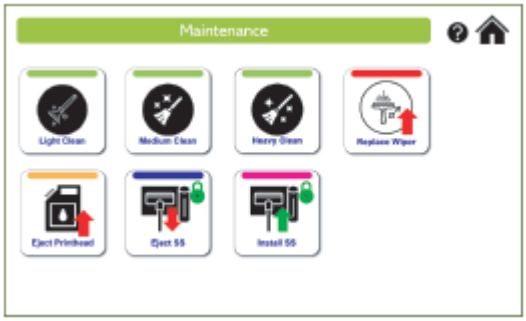

IMPORTANT: Wait for the printhead latch to be released.

Fully open the printhead latch and remove the two caps.

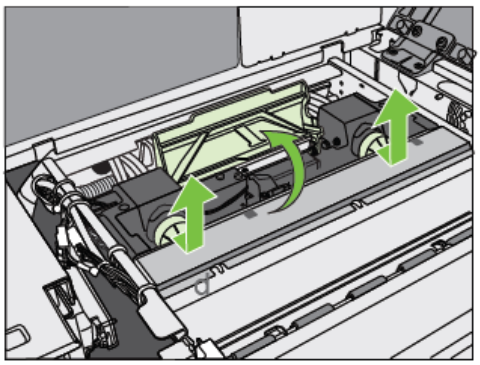

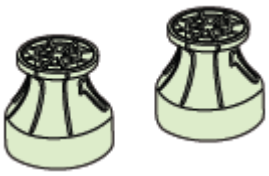

Remove printhead from the packaging. Keep the orange cover. You will need it to store the printhead when it is removed from the printer.

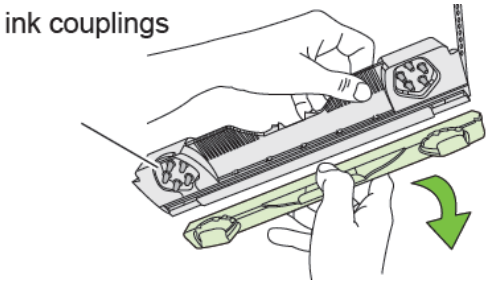

Remove the tape from the electrical contacts and nozzles. DO NOT touch the ink couplings, electrical contacts or nozzles.

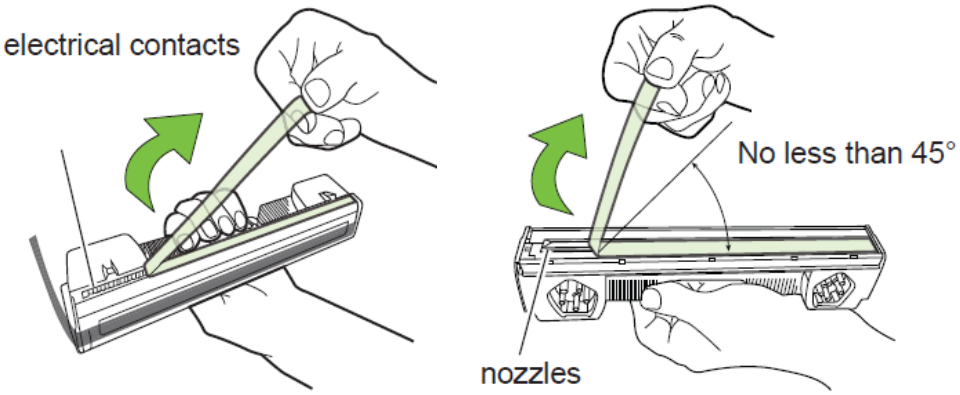

Install the printhead into the printer and close the latch.

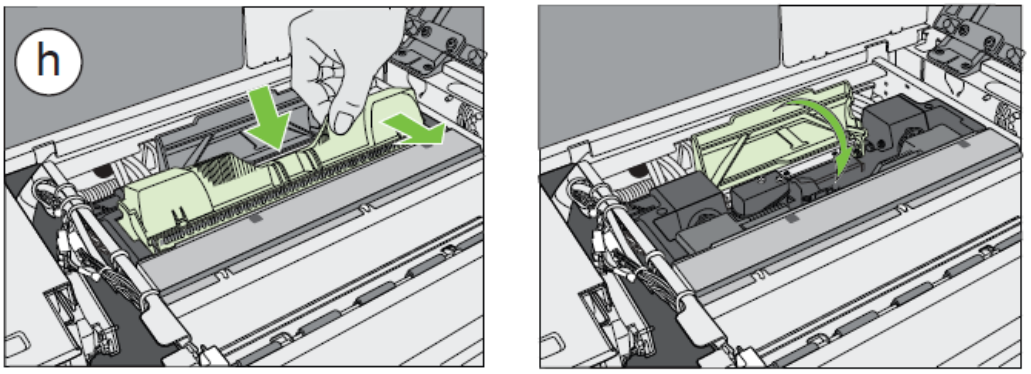

Check that ink is flowing through the tubes.

Close the top cover.

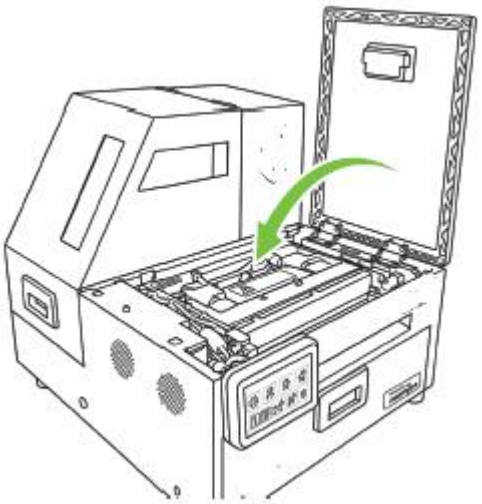

Install the printer driver

Download the latest driver from the Afinia Label website: https://afinialabel.com/support/

Launch check.exe. Setup screen will appear. Select Install Driver.

Accept the license agreement.

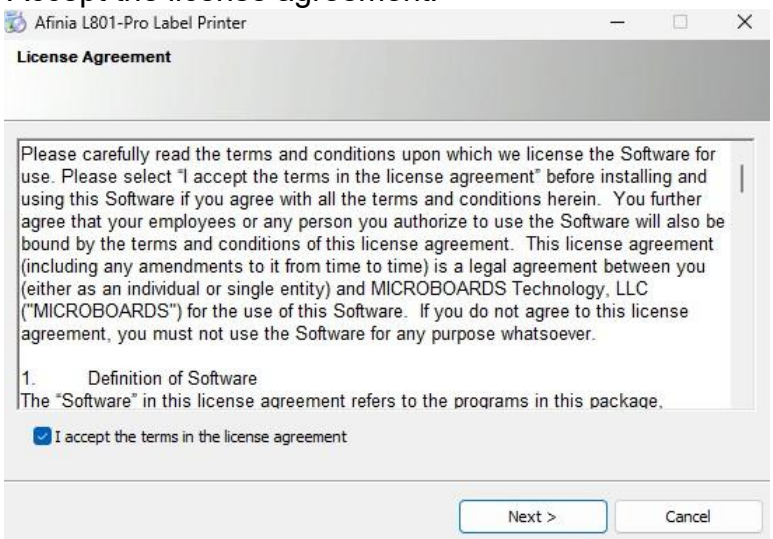

USB Install

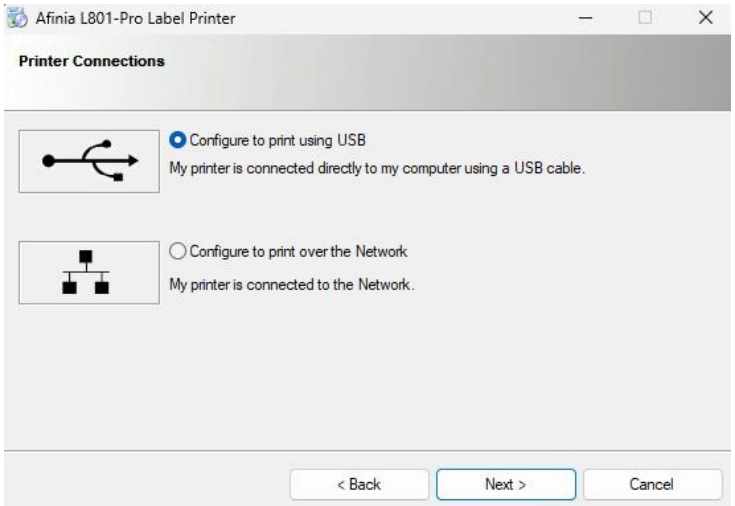

Click Next. When prompted, connect the USB cable from the printer to the computer.

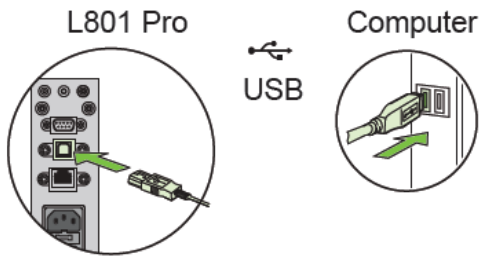

Follow the instructions on the remaining screens. Reboot the PC after installation is complete.

Network Install

Connect the L801 Pro to the network.

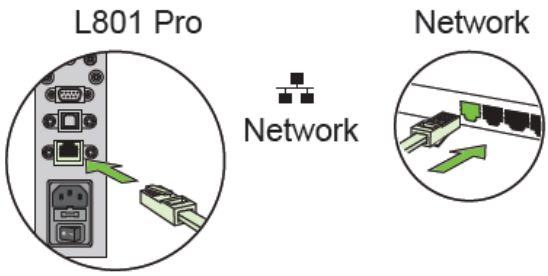

Follow the same steps above and on the Printer Connections screen select Network

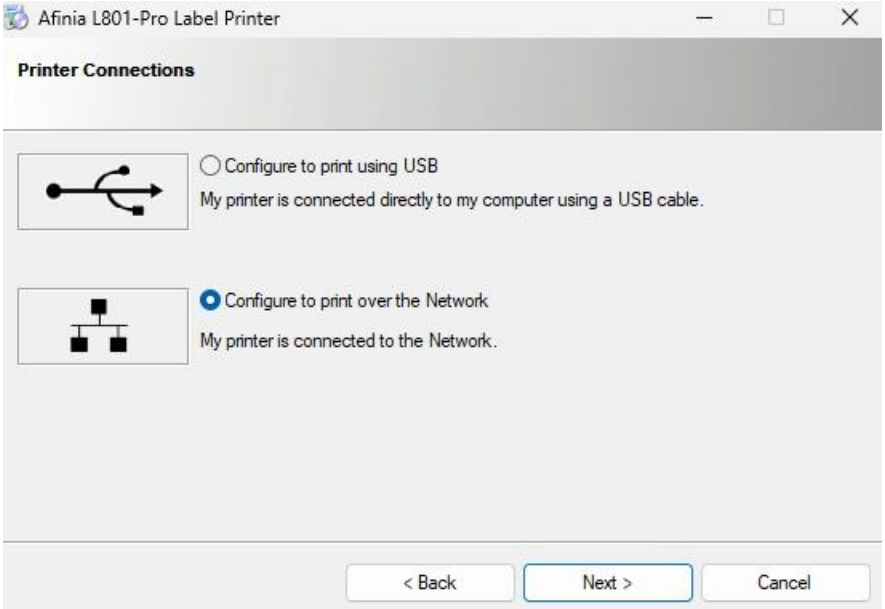

Click Next

This screen will appear. Enter the IP address of the printer. This can be found on the front panel by selecting System Setup and then Device Info. If this is not known, enter PrinterHost in the Host name field.

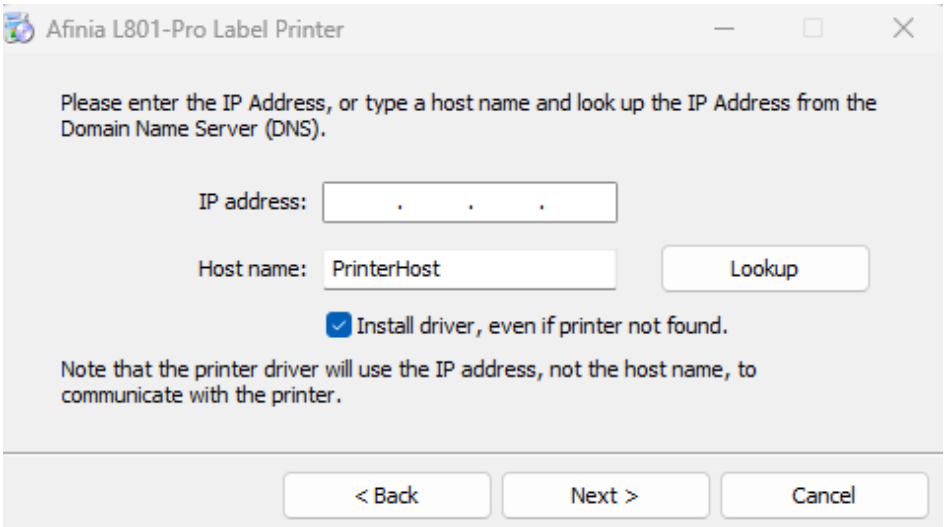

Click Lookup

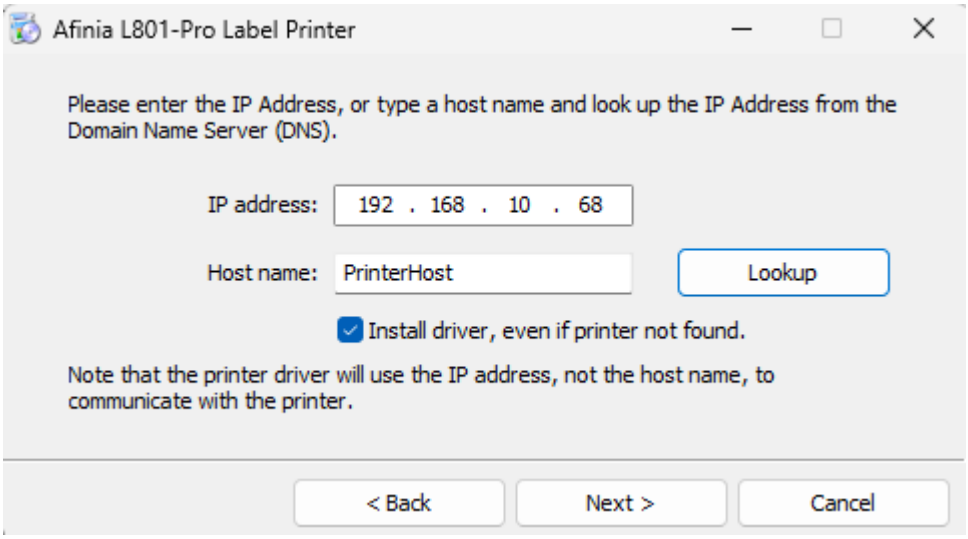

Confirm the IP address field is populated. Click Next.

Follow the instructions on the remaining screens. Reboot the PC after the driver install is complete.

Using the Touch Control Panel

The Home screen on the touchscreen panel serves as the main operational dashboard, providing real-time system visibility and navigation.

The Home screen is divided into three sections:

Top Section	Middle Section	Bottom Section
Displays: • Printer status • Real-time clock • Printhead replacement alert • Access to the self-help video library	Provides system functions • Re-print • Maintenance • System setup • Usage metrics	Displays: • Ink levels • Quick control • Preventive maintenance alerts • Power on/off

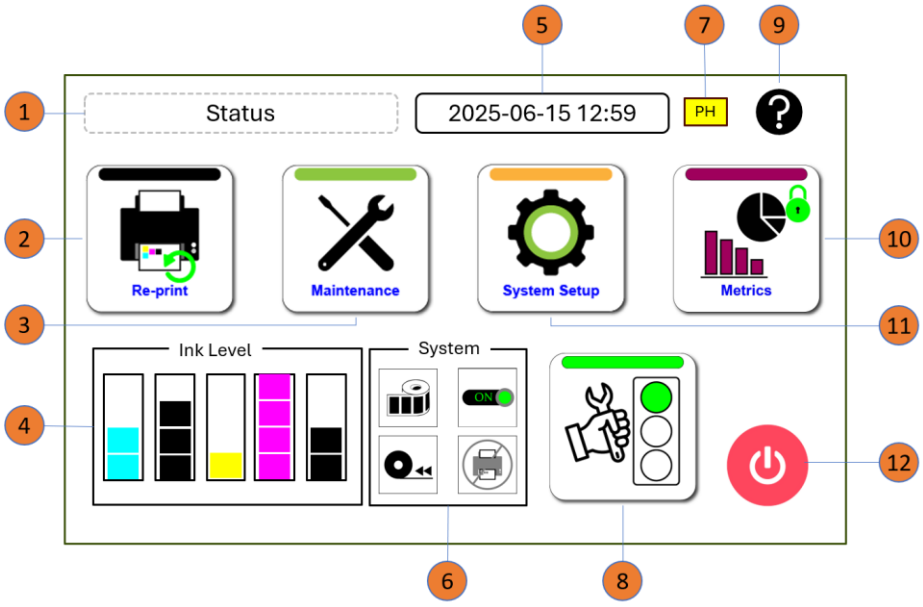

1. Printer Status
2. Re-print
3. Maintenance
4. Ink levels
5. Real-time Clock (RTC)
6. Quick Controls
7. Replace Printhead Alert
8. Preventive Maintenance Alert
9. Self-help Video Library
10. Usage Metrics
11. System Setup
12. Power On/Off

Printer status indicators – The printer operates in the following status:

Status	Description	
ONLINE READY	Printer is ready for operation	
PRINTING	Printing in progress	
WARNING	Attention required: Event in progress. Warning conditions include • Printer is in simulation mode for ink usage estimation • Printhead servicing is in progress • Media is loading • Low ink condition • Printer is restarting • Firmware upgrading is in progress	

Real-time clock (RTC) – The RTC is used for:

- Event logging
- Maintenance tracking
- Component lifecycle recording

The RTC is configured at the factory. However, the user must confirm that the date/time reflects the local time correctly upon powering up the printer for the first time. To set the clock, navigate to the **Advanced Settings** menu.

Replace printhead alert – The printer will flag when the printhead reaches the print mileage threshold set in the **Advanced settings** menu

Self-help video library – Tap on the **question mark** icon to access instructional videos covering:

- Operation procedures
- Maintenance tasks
- Troubleshooting steps

The **Home** screen provides access to many functionalities grouped under the following 4 menu buttons

Menu button	Functionalities
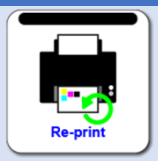	**Re-print Menu** The printer stores up to 30 recent print jobs, enabling quick reprinting without connecting to a computer. Locked jobs are protected from deletion (maximum: 30 locked jobs) and are identified by the padlock icon in the top-right corner of the preview.
	Maintenance Menu Provides tools to maintain print quality and replace key components.
	System Setup Menu Allows system configuration and customization.
	Metrics Menu Provides usage tracking similar to an odometer in a car: • Total print length (meters) • Total labels printed • Ink consumption • Printhead replacement count • Ink cartridge replacement count These metrics support maintenance planning and lifecycle tracking

For details on each sub-menu, please refer to the accompanying HMI User interface section.

<table>
<tr><th>Indicators and action buttons</th><th>Description</th></tr>
<tr><td> 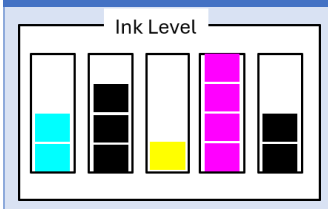
</td><td>
<table>
<tr><th>Ink Level</th><th>Description</th></tr>
<tr><td>1 bar</td><td><25% (critical)</td></tr>
<tr><td>2 bars</td><td>25–50%</td></tr>
<tr><td>3 bars</td><td>50–75%</td></tr>
<tr><td>4 bars</td><td>>75%</td></tr>
</table>
</td></tr>
<tr><td> </td><td>Switch between continuous and gap media</td></tr>
<tr><td> 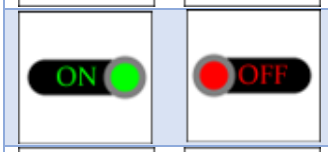
</td><td>Enable or disable printing</td></tr>
<tr><td> 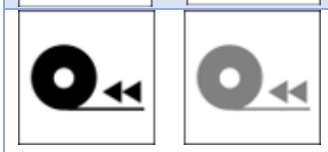 </td><td>Retract/Unload media

When the icon is disabled, it means that the action is not available</td></tr>
<tr><td> 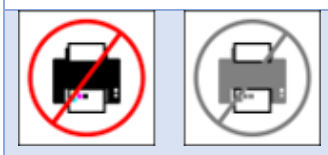 </td><td>Cancel print

When the icon is disabled, it means that the action is not available</td></tr>
<tr><td> 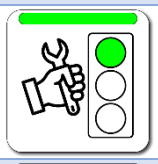 </td><td>Normal operation</td></tr>
<tr><td> 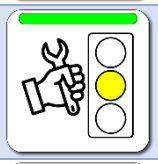 </td><td>Service is due soon (within 1,000 inches) of the upcoming maintenance milestone</td></tr>
<tr><td> 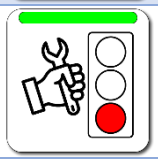 </td><td>Service is overdue</td></tr>
</table>

Configure restricted functions

Certain functions (indicated by a green padlock icon) require administrator credentials to proceed

To enter the Administrator PIN,

1. On the **HOME** page of the touchscreen, tap on **Setup**.
2. On the **Setup** page, tap on **Security**
3. Enter the 3-digit password (factory default: 123) and click **Enter**

The restricted options will re-lock automatically after 30 minutes.

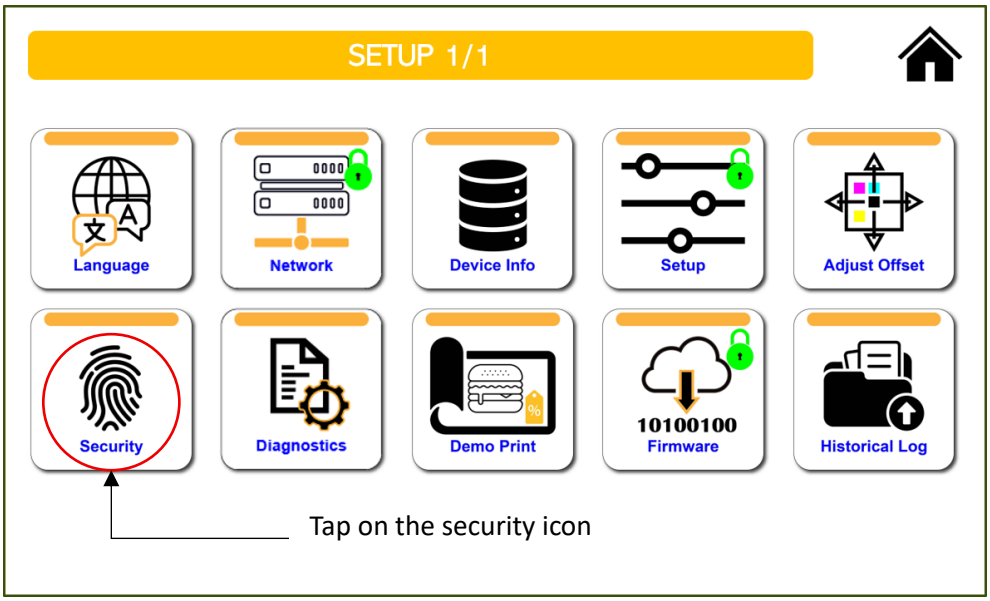

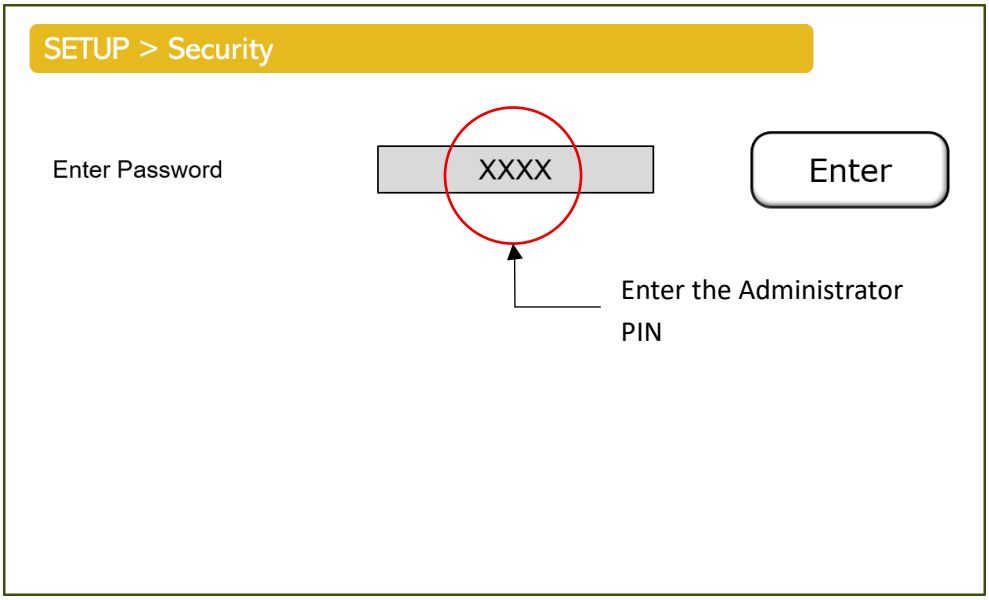

Choosing Label Media

Ensure that the label media meets the printer's requirements. Always test the media first to see if it meets your expectations. To check label media compatibility, print the diagnostic page.

Media Type and Dimensions	
Media type	Gloss, semi-gloss, and matte
Label width	2.0" to 8.5" (50.8 mm to 215 mm)
Label Length	Continuous/Roll to Roll: Maximum 40" (1.016 m)
Label thickness	Maximum 0.01" (0.3 mm) (including liner, if any) Minimum 0.005" (0.13 mm)
Core size	3" (76.2 mm)
Roll diameter	Maximum 8" (203.2 mm)

Media Handling	
Print mode	• Roll to Cut • Print and Present (non-peel) • Roll to Roll
Detection	• Gap • Continuous • Black mark

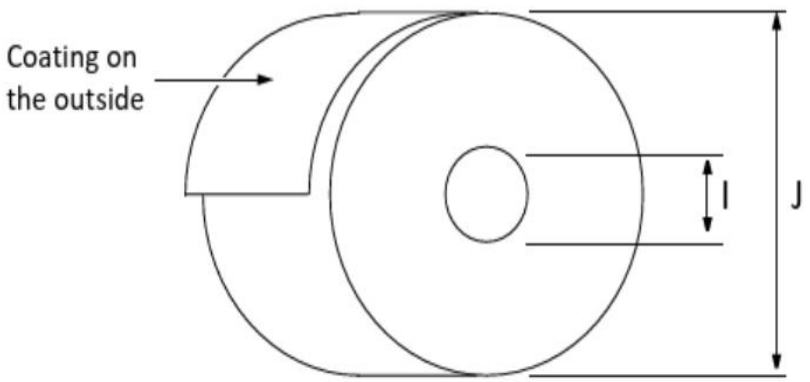

	Minimum	Maximum
I	3.0" (76.0 mm) cardboard core	3.0" (76.0 mm) cardboard core
J	N/A	Up to 8.0" (203.0 mm)

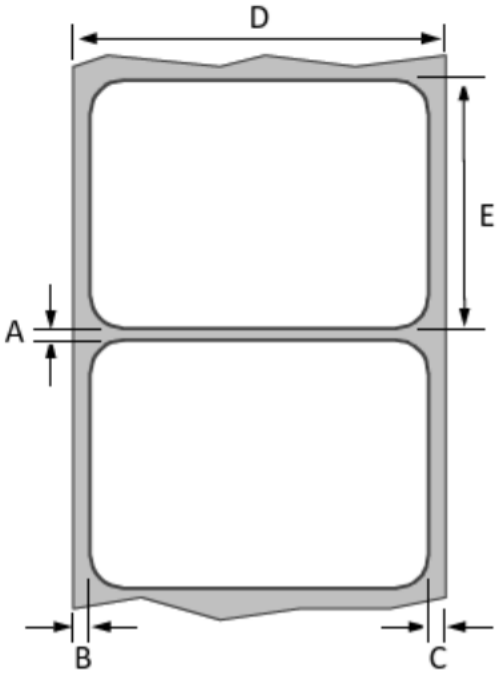

	Minimum	Maximum
A	0.125” (3.0 mm)	0.3” (8.0 mm)
B	0.0”	2.0” (50.8 mm)
C	0.0”	0.4” (10 mm)
D	2.0” (50.8 mm)	8.5” (216.0 mm)
E	2.0” (50.8 mm)	40.0” (1,016.0 mm)

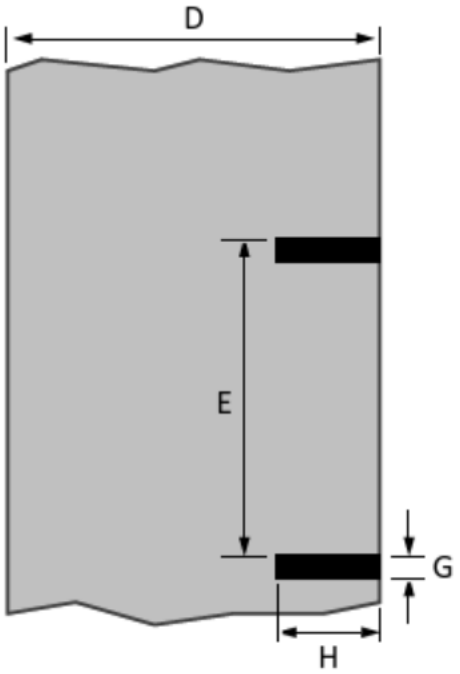

	Minimum	Maximum
D	2.0” (50.8 mm)	8.5” (216.0 mm)
E	2.0” (50.8 mm)	40.0” (1,016.0 mm)
H	1.0” (25.4 mm)	8.5” (216.0 mm)
G	0.125” (3.0 mm)	0.3” (8.0 mm)

Print Diagnostic Page

Load 6” x 4” or larger labels (with inter-label gap or continuous).

1. On the Home page of the touchscreen, tap on **Setup**.
2. On the **Setup** page, tap on **Diagnostics**
3. Select the left image and click **Print**

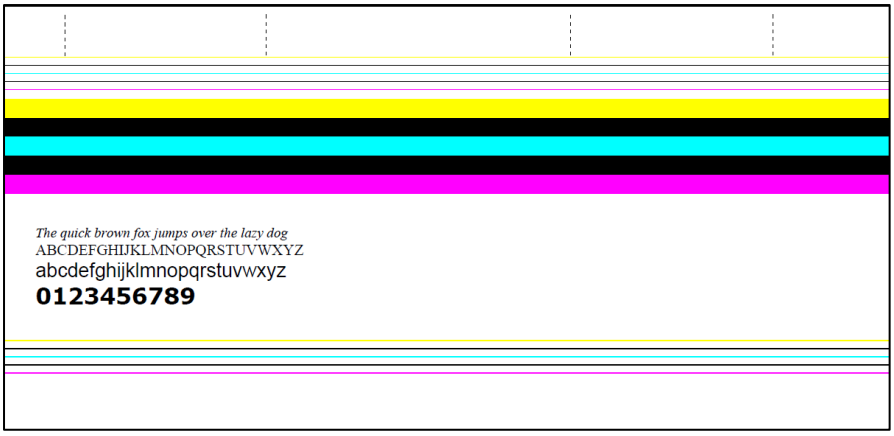

Diagnostic Page Printed on 6 x 4" gap label

4. Verify the following on the Diagnostic page:
   a. The text is legible
   b. No ink smear, color mix, or streaks.

Loading Label Media

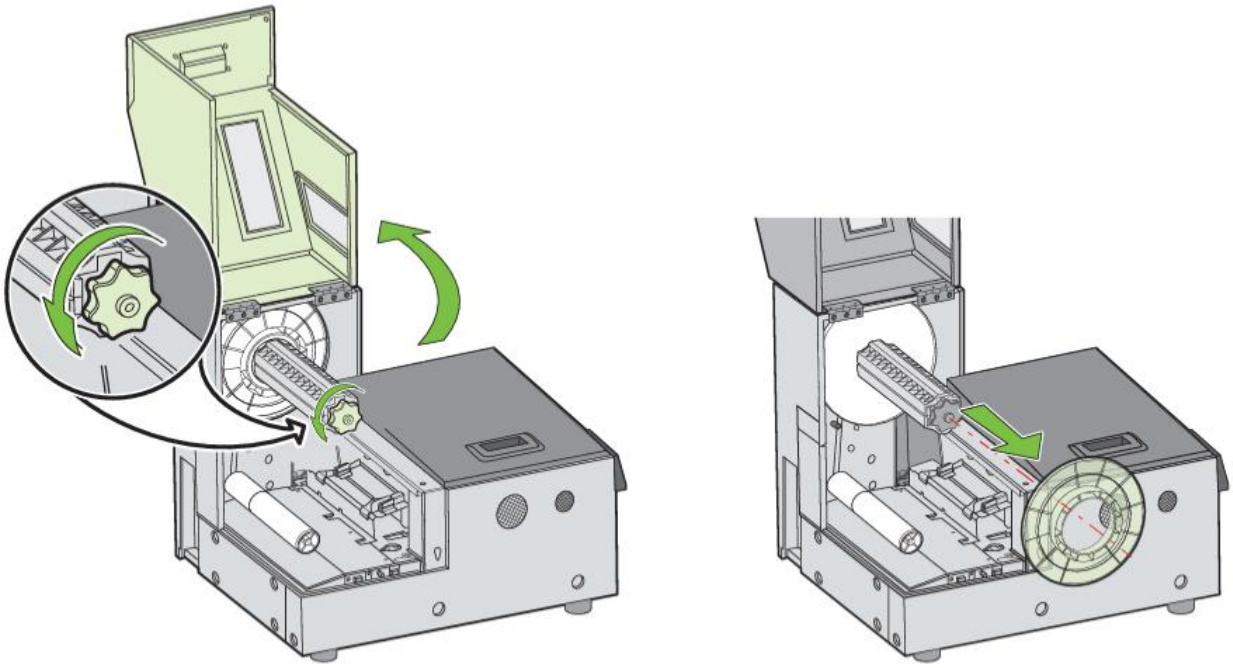

Step 1 of Loading the Media

1. Open the media cover. Loosen the knob, then remove the roll cover with the flat side facing the media roll. Then tighten the knob fully.

2. Load the media roll. Replace the roll cover with the flat side against the media roll. Then tighten the knob fully.

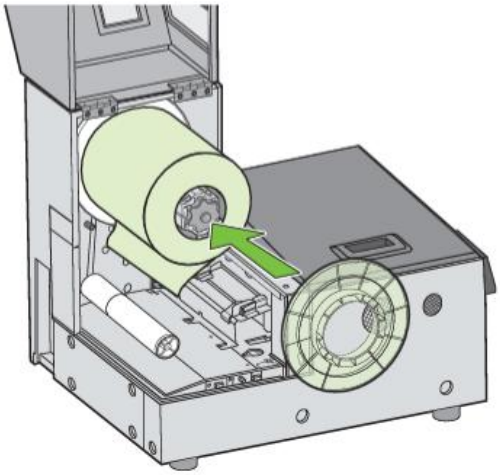

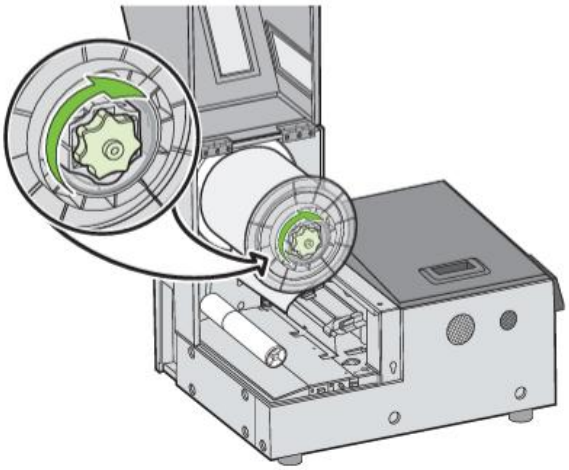

Step 2 of Loading the Media

.

3. Feed the media under the arm and into the media feed slot. Wait for the printer to load the media. Then slide the media guide to the edge of the media.

4. Closed the media cover.

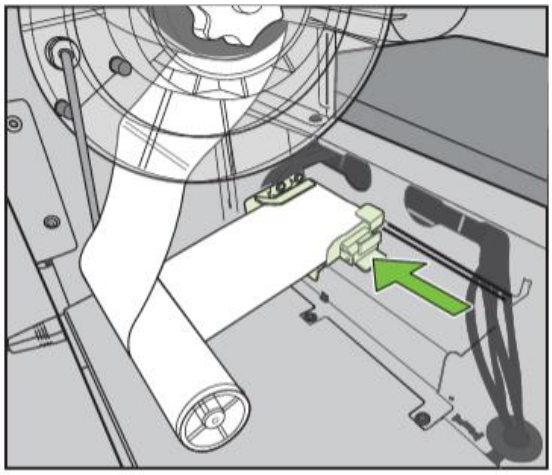

Step 3 of Loading the Media

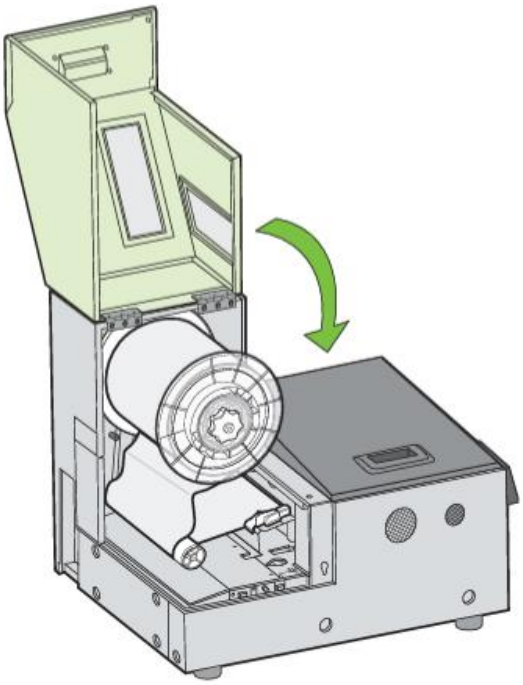

Step 4 of Loading the Media

Printing Labels

The printer is ready to print when the touchscreen displays **Printer Online**.

1. Select the **Print** command from your application on your laptop or PC.
2. Select the printer and click the **Setup**, **Properties**, or similar button. The print settings displayed are the defaults that were set in the printer driver.
3. Change the print settings if needed.

NOTE: Ensure the media settings (e.g., label size) match the media loaded in the printer

4. Print the document. Any changes to the settings only apply to the current print job. Once you exit the application, the changes may be lost. Make the changes in the printer driver if you wish to keep the settings as the default for all print jobs.

Change Default Settings in Printer Driver

To select the default print settings that will be used for all print jobs:

1. From the Windows Start menu, select Devices and Printers.
2. Right-click the printer and select Printing Preferences. The printing preferences are described in the following pages.
3. Make the changes and click OK to save.

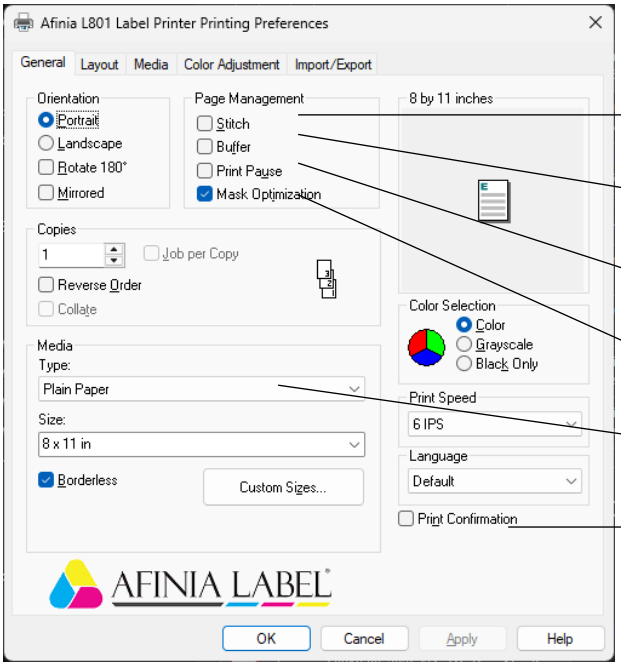

Print pages without any gap (continuous media only)

Render entire document to disk before sending to the printer. Select this option if labels are skipped when printing large files.

Select this option if labels are skipped when printing small labels.

Select this option to remove print artifacts with image file with multiple layers.

Select the Media Type that matches the media loaded in the printer.

Display a print confirmation message prior to printing.

Adjust horizontal and vertical print position. See Adjust Alignment for Printing.

Use the settings on the printer control panel.

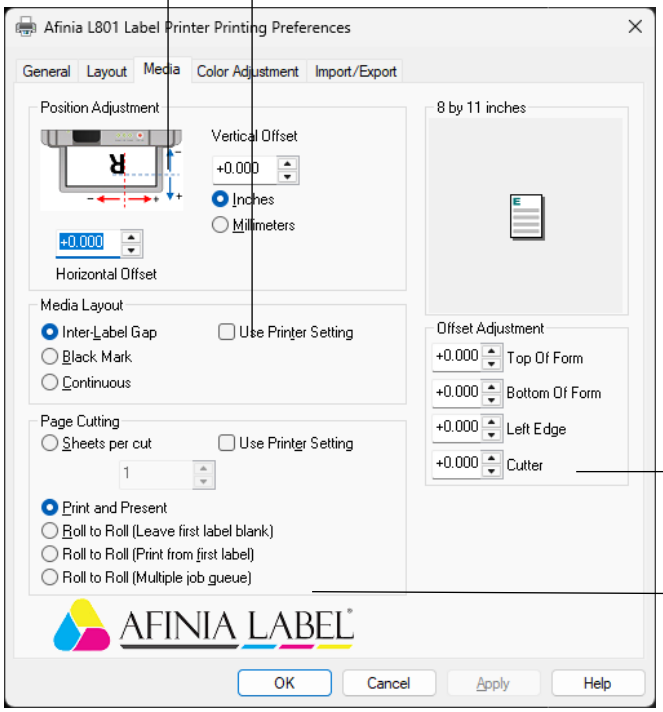

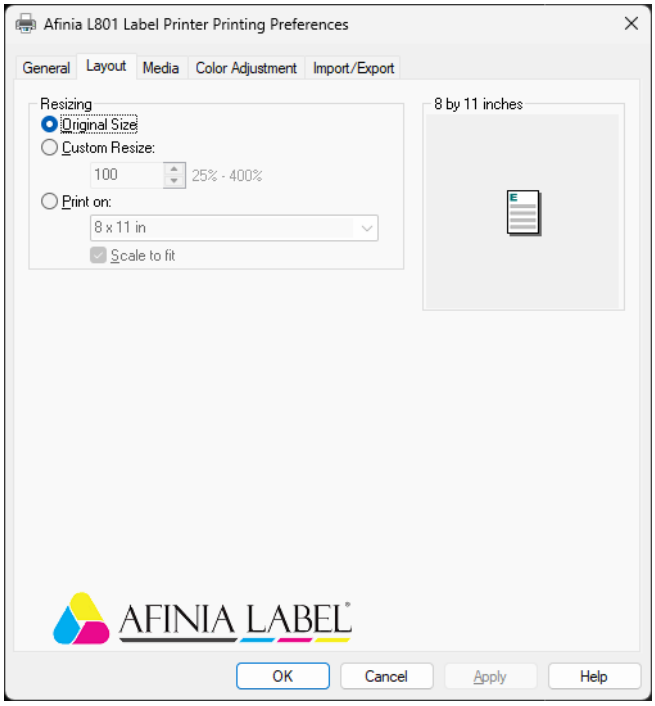

Adjust the various offsets

Sheets per cut – Cut after printing the specified number of labels. Print and Present – Print, cut, and present label. Remove the label to continue printing. Roll to Roll – Select Roll to Roll if a rewinder is used. Choose whether to print the first label or print multiple jobs without cuts in-between.

Select the Media Type

Selecting the media type that matches the media you are printing on will usually give the best print results.

Select this Media type:	When you are printing on:
Plain Paper	Plain (uncoated) paper and labels
Matte Coated Label	Matte-coated labels
Premium Matte Coated Label	Matted-coated labels. The option uses more ink for better color.
Glossy Label	Glossy labels. This option optimizes print quality and dry time.
Premium Gloss Label	Glossy labels. This option uses more ink for better color

Adjust Alignment for Printing

Always print a few test labels to check the image alignment. If the image is not centered, adjust the top of the form and/or left edge offsets on the **Media** tab of the printer driver.

A positive value for Top of Form adjusts the images towards the top of the label.

A positive value for Left Edge adjusts the image towards the left of the label.

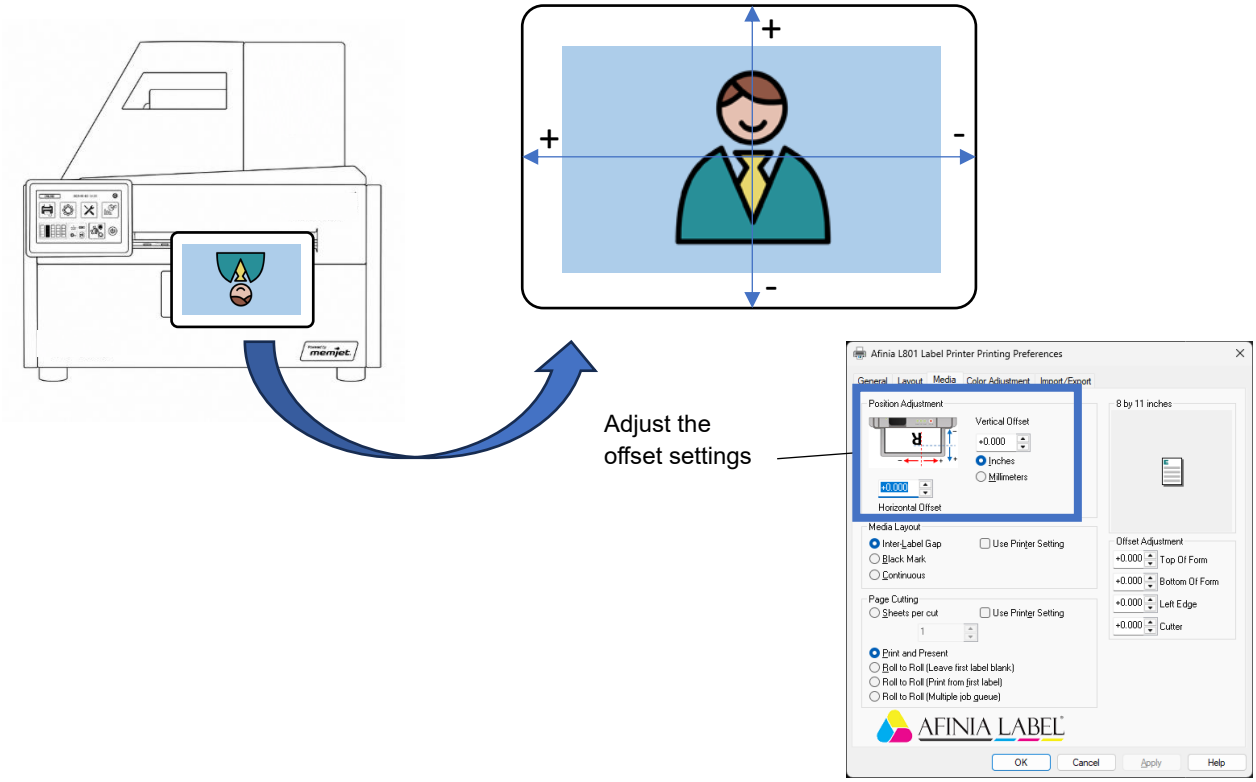

Printing Borderless (Full-Bleed) labels

The usual approach to borderless printing is to prepare an image slightly larger than the label size, then center the larger image over the label so that it prints over the edges. The following procedure describes how to make the adjustments on the L801 Pro printer.

Note the following:

- This method requires fine-tuning of the printing position, which will be difficult if the label gap is very small, e.g., 0.1” (3mm)
- As the maximum label width is 8.5” (215.9 mm), it is also difficult to print borderless labels of this size. This method works best when the label width plus bleed allowance does not exceed 8.5” (215.9 mm).
- Print at 6ips only.
- You may need to fine-tune the Top of Form/Bottom of Form/Left Edge offset from the touch plane for each label size.

Adjustments for Borderless printing

1. On the General tab of the printer driver, click Custom Sizes to set the page size slightly smaller than the label (about 0.01” or 0.2 mm in both directions). Select Print Speed of 6ips and enable Borderless.
2. On the Media tab, adjust the Left Edge to center the image on the label.

3. Print a few labels to check the print position.

4. Fine-tune using the printer touch panel.

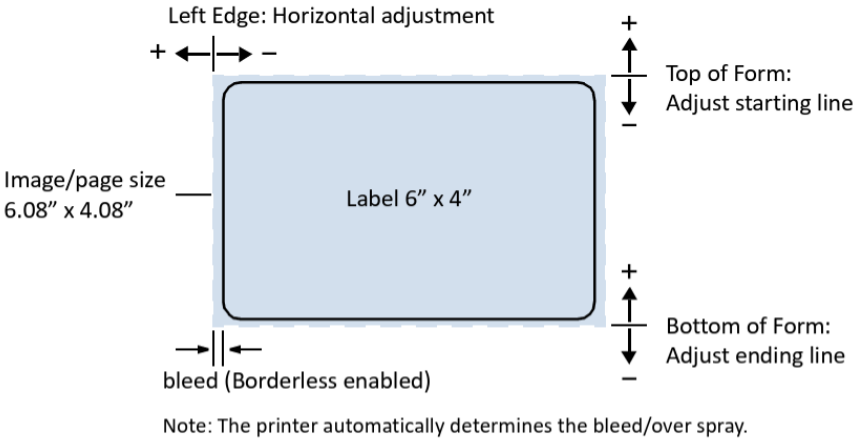

Adjusting for borderless printing example

Saving Custom Media Size Settings

Any custom media size settings will be lost if the printer driver is updated. Make a backup copy of these settings by exporting them to a file. Whenever the printer driver is updated, you can import the settings from the backup file.

Export Custom Media Size Settings

1. On the **Import/Export** tab of the printer driver, select **Media Sizes**.
2. Click **Export**.
3. Enter a filename and click **Save**.

Import Custom Media Size Settings

1. On the **Import/Export** tab of the printer driver, select **Media Sizes**.
2. Click **Import**.
3. Select the file from which to import the settings and click **Open**.

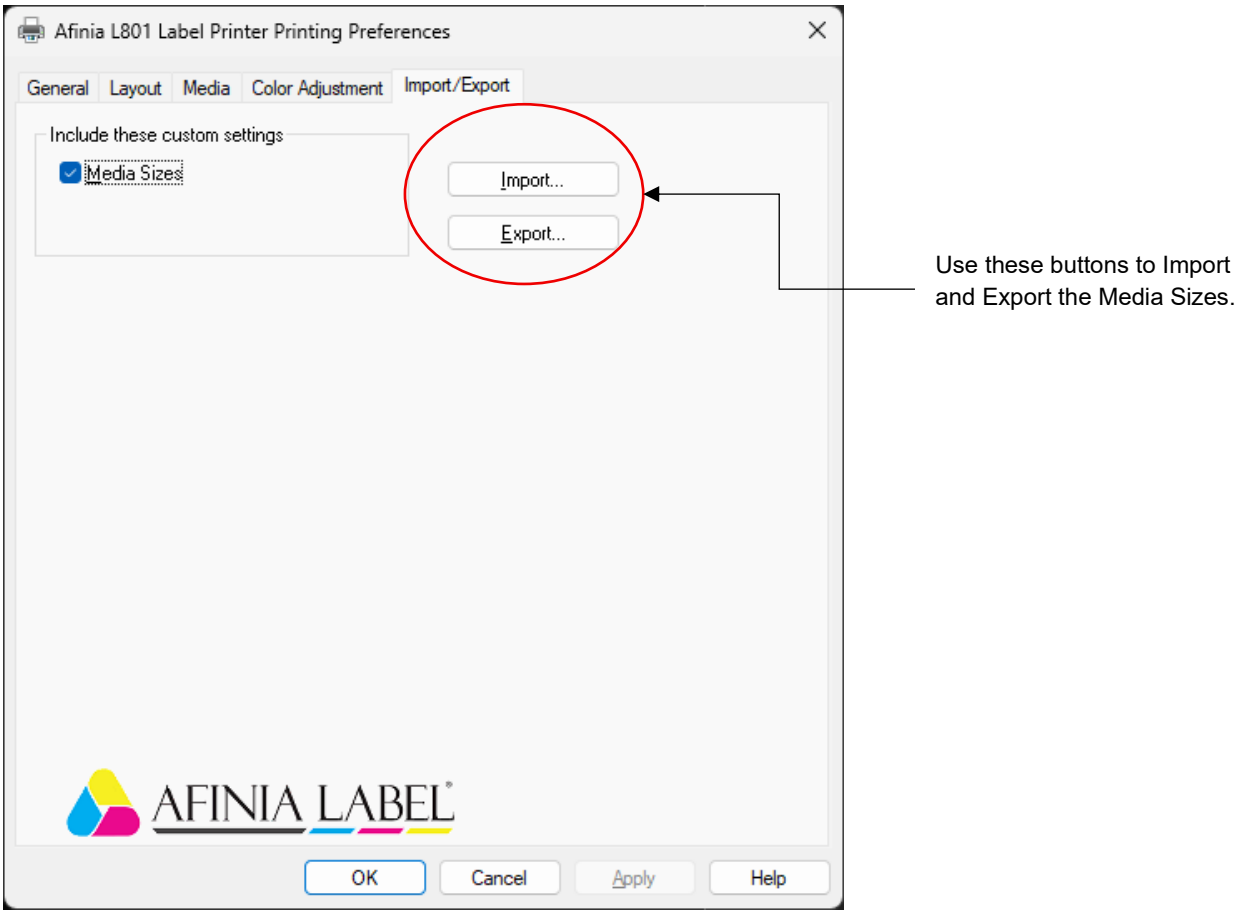

Turning Off the Printer

Always use the Power button on the touchscreen to turn off the printer. Removing power to the printer in any other way may damage it.

1. On the touchscreen, press the **Power** button either on the **HOME** page or the physical **Power** button on the top left corner of the panel and hold for 3 seconds.

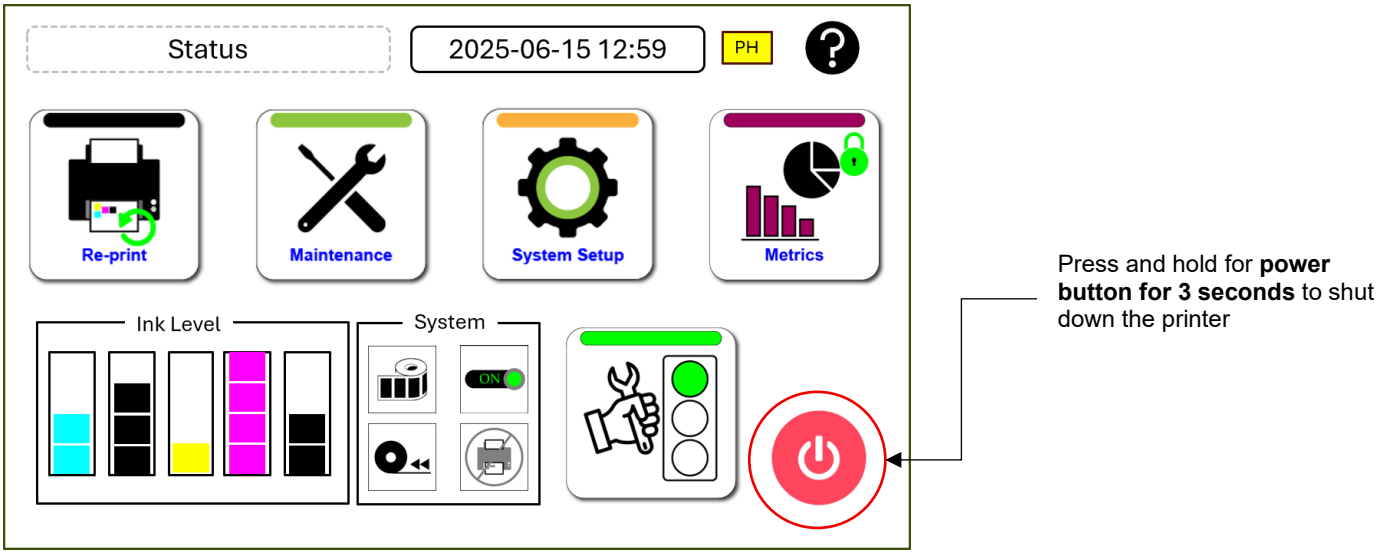

2. Wait for the LCD display on the touchscreen to turn off, then turn off the Power switch at the back of the printer. During a normal shutdown, the printer will service the printhead and save data to the memory before turning off.

If the Printer Will Not Switch Off

If the printer does not respond when you press the Power button, press and hold it for another 3 seconds. The printer should switch off. If the printer still does not turn off, you will have to switch it off using the hard switch at the back. DO NOT use this option unless it is absolutely necessary.

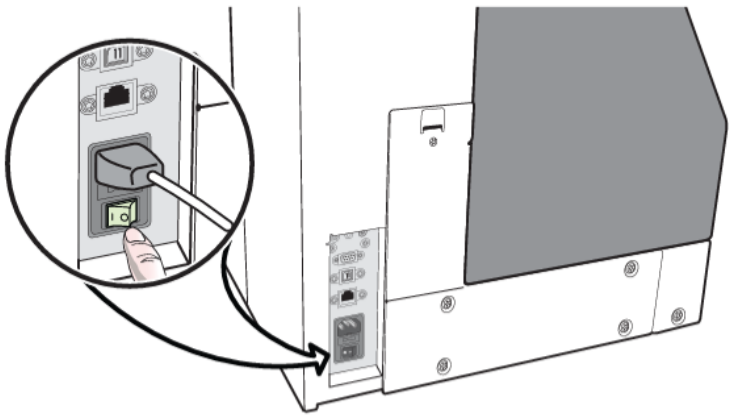

Switch off the printer using the switch at the back

Managing Printer Security (Administrator)

The administrator can change the passwords through the Embedded Web Server (EWS). It is recommended that the administrator change the password after the printer is set up. The default password is 123 for the EWS and the printer touchscreen.

Change Password

1. Log in to the EWS.

   a. On the touchscreen **HOME** page, tap on **Setup**.

   b. On the **Setup** page, tap on **Security** and enter Administrator PIN.

   c. Return to the **Setup** page and tap on **Setup**.

   d. Enable EWS access. Exit the **Setup** page.

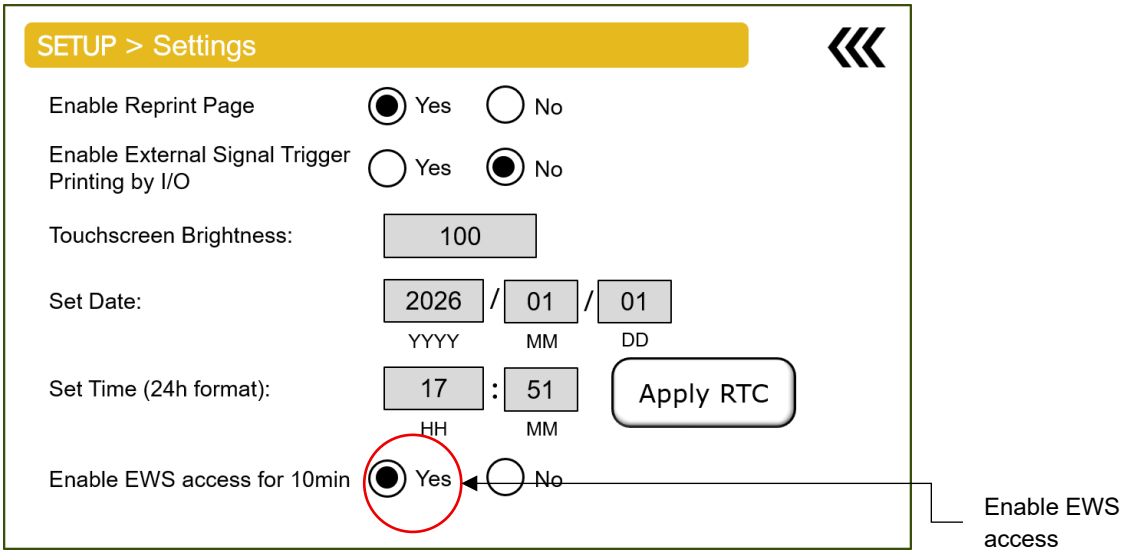

   e. Go to the laptop/PC that is connected to the printer by network.

   f. On the Windows **Start** menu, select **All Programs > Afinia > Afinia L801 Pro Label Printer > Toolbox**.

   g. Click **Afinia L801 Pro Label Printer** to launch the default web browser and open the EWS for your printer.

   h. Click **Login** to log in with your administrator password.

2. Select **Security** Setup, then select Printer **Password**.

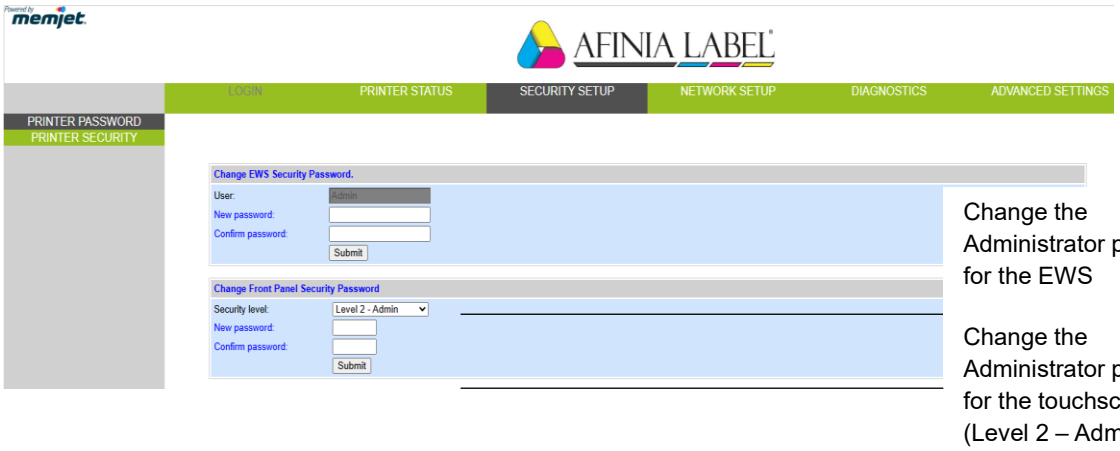

Change the Administrator password for the EWS

Change the Administrator password for the touchscreen (Level 2 – Admin)

3. Set the password and click **Submit**

   a. The EWS password can be 3 to 12 alphanumeric characters. Special characters are not allowed.

   b. The touchscreen password must be 3 digits only.

Embedded Web Server (EWS)

The Embedded Web Server (EWS) provides remote access to the printer. You can monitor the printer status and check usage metrics. The administrator can also log in to view additional information and change various settings.

1. On the touchscreen **HOME** page, tap on **Setup**

2. On the **Setup** page, tap on **Setup**

3. Enable **EWS** access. Exit the **Setup** page.

4. Go to the laptop/PC that is connected to the printer by network.

5. On the Windows Start menu, select **All Programs > Afinia > Afinia L801 Pro Label Printer > Toolbox.**

6. Click **Afinia L801 Pro Label Printer** to launch the default web browser and open the EWS for your printer.

7. The EWS displays printer information and usage metrics on the **Printer Status** page. Click Login to log in for full access to all the EWS pages.

The EWS contains the following pages:

- Printer Status
- Security Setup
- Network Setup
- Diagnostics
- Advanced Settings

Note: Some EWS settings are not applicable to the L801 Pro (but are on other Afinia Label printers) and will not be described or explained in this user guide.

EWS Page – Printer Status	Description
Information	Shows printer and printhead information, and printer counters. Control Panel – Click Launch to launch the remote-control panel. 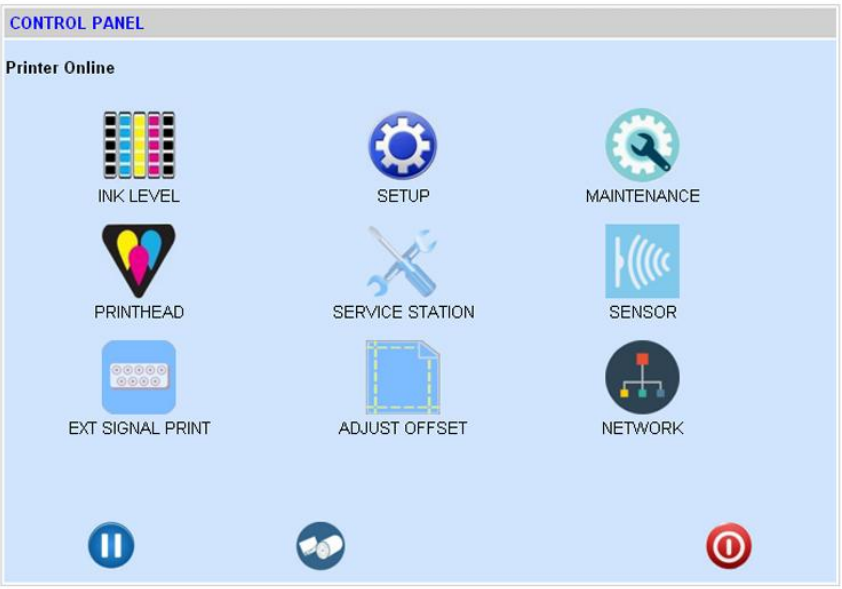
Ink Level	Shows ink levels and usage metrics. Ink usage metrics can be exported. Right-click the EXPORT ink and select Save Target As to save the data in a file.
Local Settings	Shows the current printer settings.

EWS Page – Security Setup	Description
Printer Password	Set the passwords for accessing the Embedded Web Server (EWS) and the touch panel. The EWS password can have 3 to 12 alphanumeric characters. Special characters are not allowed. The touch panel password must contain 3 digits only.

EWS Page - Diagnostics	Description
Labels	Select the media type – continuous, Gap, or Black Mark for printing all the internal pages generated by the printer (i.e., Configuration Page, Network Settings Page, and Diagnostic test plots).
Sensor Threshold Values	Run a length of labels (about 1 m or 40”) to record the readings of the gap/mark sensor without actually printing. The readings are analyzed to determine if there is sufficient contrast for the printer to reliably detect the inter-label gap or black mark. If necessary, you can adjust the sensor's threshold to improve detection, especially when printing on non-rectangular label stock. See Adjusting Gap/Mark Sensor Thresholds.
Override Auto Sensor Threshold	Set a threshold value for the gap or black-mark sensor based on the above analysis. Click Submit to send the new value to the printer.
Test Pages	Print test page. 1. Ensure the media loaded is of the required size, and the media type is selected under the labels. 2. Click the icon to print the barcodes or diagnostic page.

Adjusting Gap/Mark Sensor Thresholds

1. Load the media to be tested
2. On the EWS **Diagnostics** page, under Sensor Threshold Values:
    a. Select the test media type.
    b. Specify the length of the label (min. 1”) and click Submit to apply the value.
    c. Check **TEST** to run the test.
    d. Click **GRAPH** to plot the readings

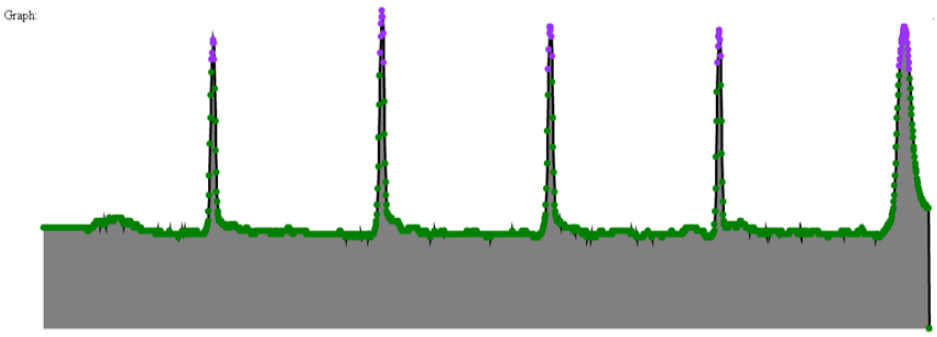

3. Review the graph and adjust the sensor threshold if needed, under Override Auto Sensor Threshold.

   Interpreting the graph:

   - **Normal** – Sharp spikes at regular intervals indicate that the sensor can clearly detect the gap (or mark) on the media. The above is an example of a normal graph.
   - **Noisy** – Imperfect spikes at regular intervals. The printer may erroneously detect the Top-of-Form. For more reliable detection, reduce the sensor's sensitivity to obtain a graph that is close to Normal.
   - **Bad** – Readings are not distinctive. In this case, increase the sensor's sensitivity. If the readings remain the same at maximum sensitivity, it indicates insufficient contrast between the gap (or mark) and the liner. That is, this media is incompatible with the printer.

Advanced Settings

- Advanced Settings 1
- Advanced Settings 2
- Import/Export Setting

EWS Page – Advanced Settings 1	Description
Remote commands	Select a command and click **Submit** to send it to the printer
Mid-job Servicing Interval	For roll-to-roll print mode only Select a servicing interval and click Submit. The printer performs a service routine at the specified interval before resuming printing.
Keep Unused Printhead Nozzles Wet Setting	Disable or select the firing frequency of unused printhead nozzles to keep them hydrated. By default, Automatic mode is selected, which assigns a fixed frequency suitable for each print mode.

Retract media when the printer is idle	When the media remains in the printer for some time, it may become deformed, affecting print quality. To avoid this, select this option.
Enable virtual printing	Simulate printing to estimate ink usage. 1. Select **Enable virtual printing**. 2. Print in the usual way. The printer will not actually print, but will estimate ink usage for the print job. 3. On the **Printer Status** page, select **Ink Status** to view the estimates. The touch panel will display **Simulation** when the printer is in this mode.
Disable cut at the start of a print job	Do not cut the media at the start of a print job. Select this option to reduce paper dust/debris if the printer is used in a clean room.
Use fixed USB ID	When selected, the host PC uses a fixed USD ID and does not install a printer driver every time a printer is connected, reducing the printer setup time. Select this option if you need to hot-swap printers on the PC.
Enable Enhanced Fast-Time-To-First Label (ETTRL)	When selected, skip some printhead cleaning routines before a print job starts, reducing the interval before the first label prints (Print and Hold mode).
Enabled Extended Printhead Clean Cycle at the end of the job	When selected, it extends the printhead cleaning cycle at the end of the print job. Use this option only for severe cases of streaking; it will consume more ink.
Enable ink to spit every 10 minutes in standby mode	Select this option to protect the printhead in a dry environment with low humidity (~20% RH) and low temperature (~15°C or 59°F).
Enable MM servicing message from the control panel	When selected, the service station's servicing and error messages are displayed on the printer touchscreen.
Enable smart nozzle health extender algorithm	When selected, repetitive images are printed using groups of adjacent nozzles in the printhead rather than the same nozzles each time. This helps extend the printhead life. However, it causes a gradual shift of the image up to 1 mm to the left (viewing from the printer output). Do not select this feature if image shifting between labels is not desirable. This feature is ignored for Borderless printing.
Cut the first label (for length > 8”) at media load	When selected, the printer automatically cuts the first label (if > 8” long) when loading a new label roll. This eliminates media skew when the media is retracting.

Enable support for translucent synthetic media in continuous print mode	Select this option to prevent the printer from incorrectly reporting a No Media error when semi-opaque continuous media is used.
Enable print over label gap and black mark	Select this option to continue printing an image across labels (over the gap or black mark on continuous media). For example, when printing wine labels, the front and back labels are printed as a single page.
Enable the Memjet TPS algorithm for the printhead	When selected, the printer will reduce the printhead's thermal energy during power-up. This helps prolong the printhead life. This may result in more discrete transitions between color tones (or gradient). Do not select this option if your label design has color blocks or a tone gradient.
Do not unload media on power off	When selected, the printer will not unload the media upon powering down. Note: Leaving the media in the printer for an extended period may cause it to curl and jam during printing.
Improve gap detection for thick liners	The typical label liner is about 0.06 mm or 0.0015”. When using media with thick liners, it may be necessary to adjust the gap sensor sensitivity to ensure the printer reliably detects the gap between labels. (See Adjusting Sensor Sensitivity) If adjusting the gap sensor's sensitivity does not work, select this option. If the problem persists, we advise you to switch to another medium compatible with the printer.
Display the last job page count when the printer is idle	When selected, the number of labels printed will be displayed on the touch panel until the next print job starts.
Disable the COM port	When selected, the printer will ignore or not transmit signals through the COM port, which is used mainly for debugging.
Disable input sensor detection while printing	When selected, the printer will ignore the input sensor. This feature helps prevent the printer from incorrectly recognizing the end of the media roll, which may occur when the media has a thick liner that makes gap or black mark detection difficult.
Enable a blank page after every job in the multiple-job queue	When selected, the printer will not print on the first label when starting each job in the multiple-job queue.
Enable advanced end-of-roll handing	Select this option to allow the following when printing roll to roll: When the printer reaches the end of the roll with a printed label in the cutter module, it pauses to allow the user to release the media from the core. Then the printer will cut and eject the remaining media when the user presses the Eject button on the touch panel.

Advanced media check	When selected, the printer will check the media roll and report an error if the media is not correct for the print job.
Disable media cut while canceling a job (Multiple jobs Queue)	When selected, the printer does not cut the media if a job is canceled in a multiple-job queue.
Disable label length check when loading a new label stock	When selected, the printer does not check the label length when a new media roll is loaded.

EWS Page – Advanced Settings 2	Description
Printer Pause Settings	• **Pause** – The printer will print labels at the selected time interval. • **Print & Present** – Move the printhead to the capped position at the selected time interval after the last print. • **Multiple Job Queue** – Cut the media and move the printhead to the capped position if the next print job in the queue is not received after waiting for the selected time interval. • **Out of Ink** – Cut the media and move the printhead to the capped position after the selected time interval if the printer runs out of ink. • **End of Job** – Move the printhead to the capped position at the selected time interval after printing is completed.
Unwinder Settings	• **Disable** – Select this option when using an external unwinder. • **Invert rotation** – Select this option when using face-in label stock. • **Minimize TOP offset for 1st Label** – Select this option only if you find that the TOP offset for the first label of the roll needs to be minimized. • **Handle media with curl** – Select this option when using media that may curl, such as thick media.
Media Gap Setting	• Specify the inter-label gap when using continuous media. Click Submit to apply the new value. • Specify the maximum gap, if using non-standard gap labels. Click Submit to apply the new value. (3 mm or 0.125” is standard for gap labels)

Printhead Service Setting	• Specify the servicing level when the ink door is closed. • Specify the pre-job printhead service level.
Fine-tuned linefeed calibration	When printing large images, the printed image may be slightly shorter due to the linefeed. Fine-tune by entering a correction (stretch) factor calculated as follows; Correction factor = (Printed Length/image Length) x 1,000,000
Wiper Maintenance Schedule	Specify the time interval for the wiper to clean itself. Use this option in a dry environment (10% RH or less) to prevent the wiper roller from becoming too dry for it to properly wipe and clean the printhead.
Cut After Print Setting	Set the delay before the printer cuts the label.
Printer Shutdown Schedule	Shut down the printer at a specific time each day. Click Submit to save the settings.

EWS Page – Advanced Settings 2 > Import/Export Settings	Description
Import Setting	Import the Advanced Settings from another printer
Export Setting	Export the Advanced Settings to another printer.

Other Support Tools

On the Windows Start menu, select **All Programs > Afinia > Afinia L801 Pro Label Printer > Support Tools**.

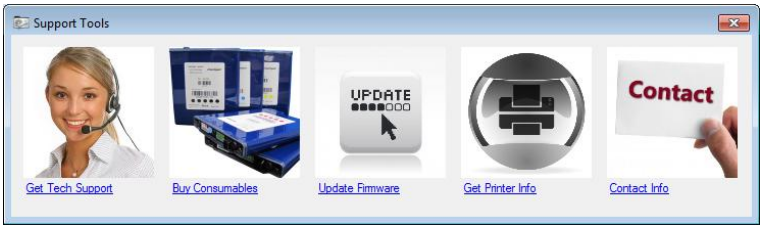

The Support Tools consist of the following:

- **Get Tech Support**: Opens the Technical Support web page.
- **Buy Consumables**: Opens the consumables web page for you to purchase ink supplies online.
- **Update Firmware:** Helps you to update the printer firmware.
- **Get Printer Info**: Displays a log of printer activity and errors. They may be required when you contact Technical Support.
- Contact Info: Allows you to save your contact information, which will be included in the printer info log.

L801 Pro Human-Machine Interface (HMI)

Introduction

This guide provides the operational instructions and reference information for the L801 Pro Human-Machine Interface (HMI). It is intended for:

- Operators
- System administrators
- Maintenance personnel

The guide explains how to operate, configure, maintain, and troubleshoot the L801 Pro printer via its touchscreen interface.

System Overview

The L801 Pro HMI is a touchscreen-based interface that enables full control and monitoring of printer operations. Key functions include:

- Printer operation and status monitoring
- Print job and re-print management
- Maintenance operations
- System configuration and setup
- Performance metrics and logs
- Preventive maintenance tracking
- Guided self-help videos

Note: Certain functions (indicated by) require administrator credentials.

Home Screen

The Home Screen serves as the main operational dashboard, providing real-time system visibility and navigation.

Screen Layout

The Home Screen is divided into three sections:

Top Section	Middle Section	Bottom Section
Displays: • Printer status • Real-time clock • Printhead replacement alert • Access to the self-help video library	Provides system functions: • Re-print • Maintenance • System setup • Performance metrics	Displays: • Ink levels • Quick control • Preventive maintenance alerts • Power On/Off

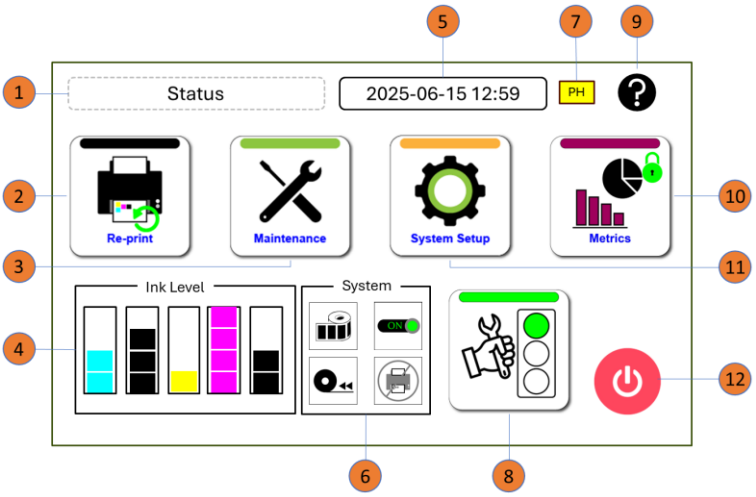

1. Printer status
2. Re-print
3. Maintenance
4. Ink Levels
5. Real-time Clock (RTC)
6. Quick System controls
7. Replace printhead alert
8. Preventive maintenance alert
9. Self-help video
10. Metrics
11. System setup
12. Power on/off

Printer Status Indicators

The printer operates in the following states:

Status	Description
ONLINE READY	Printer is ready for operation
PRINTING	Active print job in progress
WARNING	Attention required; event in progress

Warning Conditions Include:

- Printer is in simulation mode - ink usage estimation
- Printhead servicing in progress
- Media is loading
- Printer is shutting down
- Low ink condition
- Printer is restarting
- Firmware upgrading in progress

Real-Time Clock (RTC)

The RTC is used for:

- Event logging
- Maintenance tracking
- Component lifecycle recording

The RTC (Real-Time Clock) is configured at the factory. However, the user must confirm that the date/time reflects the local time correctly upon powering up the printer for the first time.

To ensure the clock is correctly configured during initial setup, please refer to the Configuring the Real-Time Clock section in the Advanced Settings.

Printhead replacement Alert

The printer will flag when the printhead reaches the print mileage threshold set in the Advanced Settings.

Self-Help Video Access

Tap the **icon** to access a library of instructional videos covering:

- Operation procedures
- Maintenance tasks
- Troubleshooting steps

Re-print Menu

The printer stores up to 30 recent print jobs, enabling quick reprinting without reconnecting to a computer.

Locked jobs are protected from deletion (maximum: 30 locked jobs) and are identified by the icon in the top-right corner of the preview.

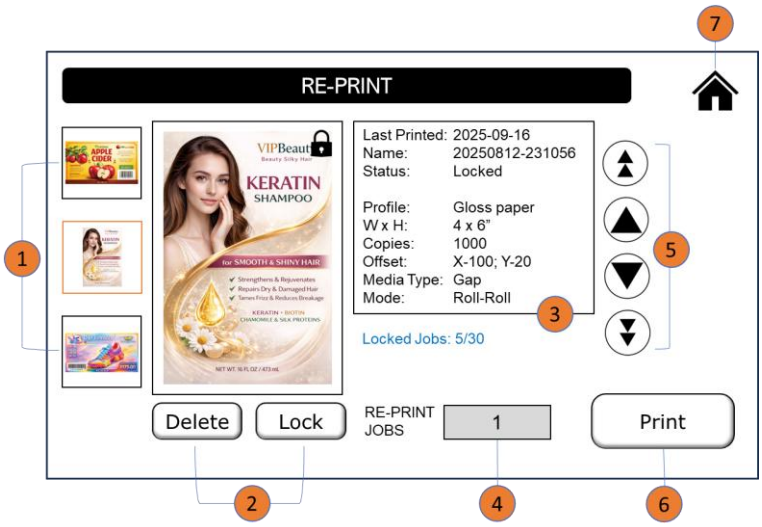

1. Thumbnail of print jobs.
2. Delete and lock a print job.
3. Print job information
4. Print jobs to be repeated
5. Thumbnail scroll bar
6. Confirm print button
7. Return to HOME menu

Reprint Procedure

1. Tap **Re-print** from the Home Screen
2. Scroll through available jobs using the navigation buttons
3. Select the desired job
4. Optional actions:
    - Delete job
    - Lock/unlock job
5. Verify:
    - The correct media type is loaded onto the printer
    - Copies per job
6. Enter the number of re-print jobs
7. Tap **Print**

Printing Behavior

Total output = **Copies per Job × Number of Re-print Jobs**

Example:
10 copies/job × 4 re-print jobs = **40 labels to be printed**

Print Dialog and Control Options

When the printer is printing a job, it will display a print dialog as shown below

1. Printer Status
2. Print job information
3. Current printed copy
4. Error recovery video

During printing, the available controls include

- **Pause** – Temporarily stop printing
- **Cancel** – Terminate the job
- **Continue** – Resume after resolving an error

If an error occurs:

- An error code will be displayed in the printer status
- Tap the icon for the recovery instructions

Maintenance Menu

Provides tools to maintain print quality and replace key components.

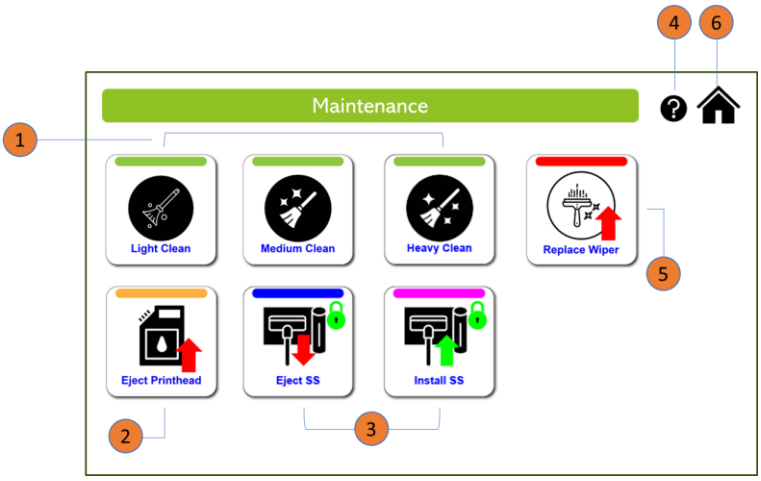

1. Printhead cleaning level
2. De-prime/release PH
3. Eject/Install SS
4. Tap for self-help video
5. Replace the wiper
6. Return to HOME menu

Printhead Cleaning

Three cleaning levels are available:

1. **Light Clean** (Recommended First)
2. **Medium Clean**
3. **Heavy Clean** (Use as the last resort)

Component Replacement

Wiper Replacement

- Activates positioning for removal and replacement
- Follow video instructions via the icon

Printhead Replacement

- Automatically depressurizes (de-primes) the printhead
- Unlocks the printhead latch mechanism for removal

Service Station (SS) Replacement

- **Eject SS** – Prepares the service station for removal
- **Install SS** – Repositions new unit correctly

System Setup

Allows system configuration and customization.

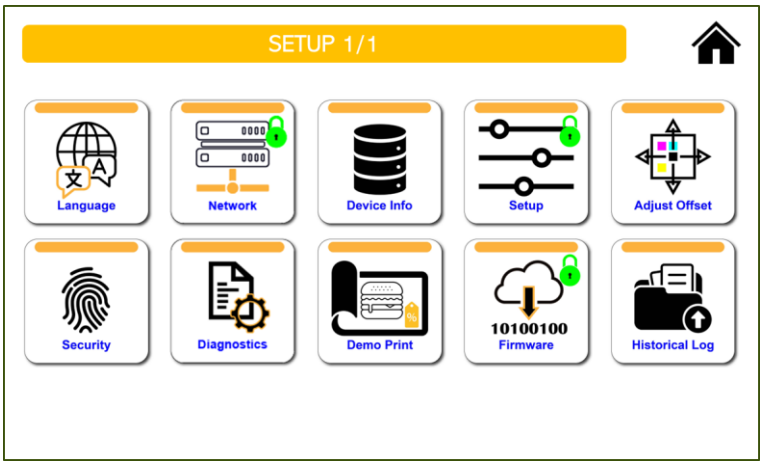

Top Row (Left to Right)

- Language Settings
- Network configuration
- Device Information
- Advanced settings
- Adjust XY offsets

Bottom Row (Left to Right)

- Admin Login
- Print Diagnostic plots
- Print demo plots
- Upgrade firmware
- Historical Log

Language Settings

- **Language Selection for the HMI:**
  English, French, Italian, German, Simplified Chinese, Traditional Chinese, Korean, and Spanish.

Network Settings

- **Network Configuration:**
  Select between DHCP (Automatic) or enter the IP address manually.

Device Information

Displays:

- Printer model and serial number
- Firmware and HMI versions
- MAC address
- Printhead usage data (distance, count, installation date)
- Ink cartridge details

Configure the printhead replacement alert:

- Enter the alert mileage of the printhead in meters to change the printhead. The default mileage is 6,000 meters. You may enter a value between 1,000 and 6,000 meters.

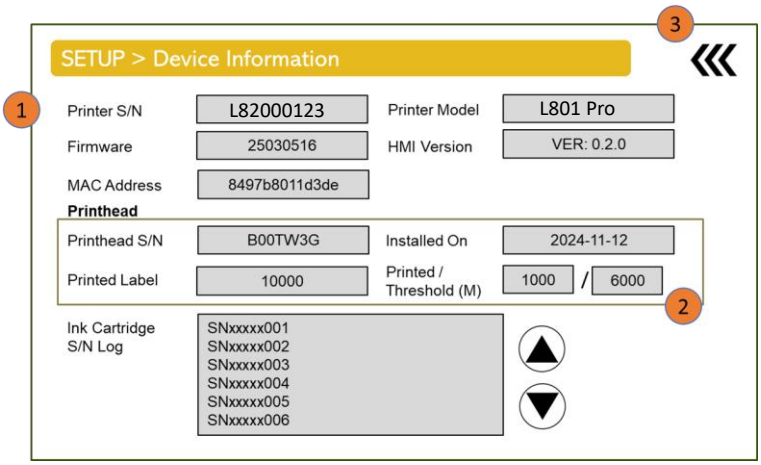

1. Display printer info
2. Set PH replacement alert
3. Return to the previous menu

Advanced Settings (Administrator Access Required)

Includes:

1. Enable/disable the Re-print function
2. GPIO external control
3. Adjust screen brightness
4. Configure Real-Time Clock
5. Enable Embedded Web Server (EWS)
    - Auto-disables after 10 minutes of inactivity
    - Accessible via USB only

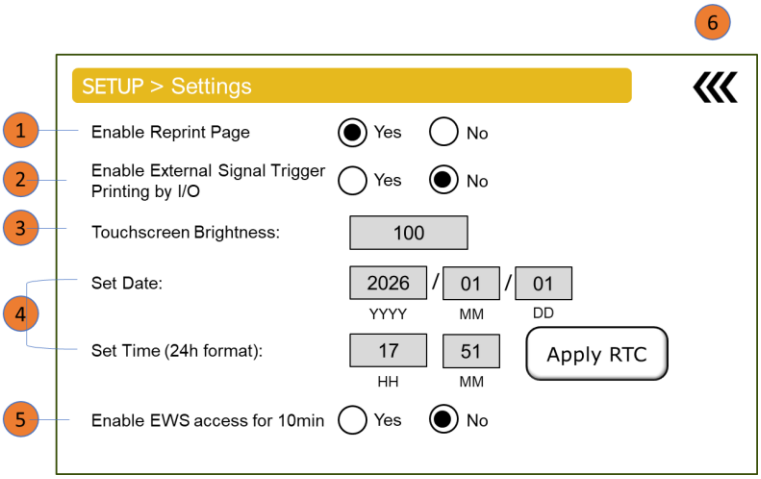

1. Disable the Reprint page
2. Enable printing by GPIO
3. Adjust HMI brightness
4. Set the RTC
5. Enable EWS access
6. Return to the previous menu

Offset adjustments (X/Y alignment)

Adjust the X-Y offset for the Top of the label and the cutter position.

Security

Enter the security PIN (default: **1234**) to access locked features. Use the EWS to change the default PIN.

Diagnostics

- Print diagnostic plots
- Generate log files for technical support

Firmware Updates

Procedure:

1. Connect the printer to the network
2. Tap **Check for Updates**
3. Download firmware via connected PC/laptop
4. Tap **Install**

⚠ **Do not power off the printer during installation**

Historical Logs

Events recorded include:

- Cartridge and printhead installation
- Administrator login
- Maintenance resets
- Firmware updates

Export the log file to a thumb drive using the USB Host port.

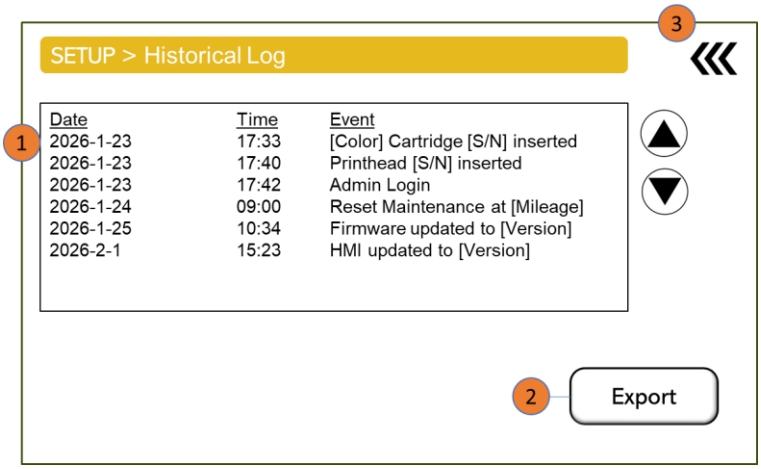

1. Display the past events
2. Export the log to a USB drive
3. Return to the previous menu

Metrics

Provides usage tracking similar to an odometer system:

- Total print length (meters)
- Total labels printed
- Ink consumption
- Printhead replacement count
- Ink cartridge replacement count

These metrics support maintenance planning and lifecycle tracking.

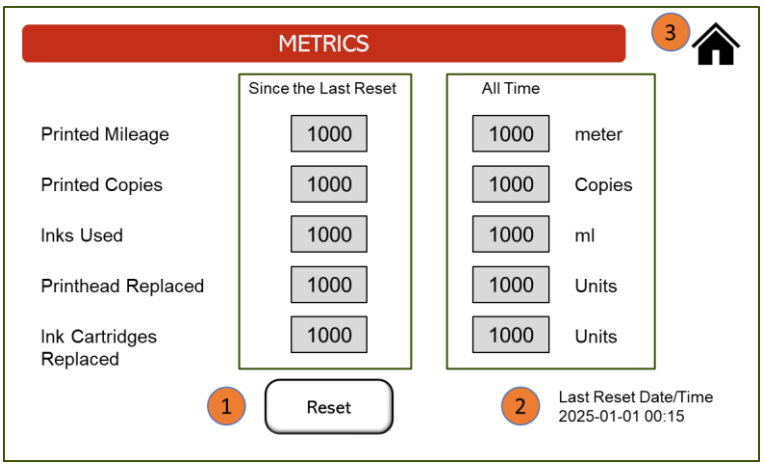

1. Reset the counter
2. Display the date/time of the reset
3. Return to HOME menu

Bottom Panel Functions

Ink Level Indicators

Level	Description
1 bar	<25% (critical)
2 bars	25–50%
3 bars	50–75%
4 bars	>75%

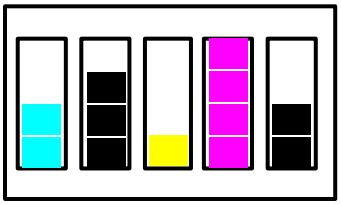

Quick Action Controls

- **Media Toggle** – Switch between gap and continuous media
- **Online/Offline** – Enable or disable printing
- **Retrack Media** – Unload media
- **Cancel Print** – Stop active job

Preventive Maintenance Alerts

The system tracks usage and prompts maintenance at defined intervals:

- **1 million inches**
- **2.5 million inches**
- **5 million inches**

Alert Indicators

Color	Meaning
Green	Normal operation
Yellow	Service is due soon (within 1,000 inches) of the upcoming maintenance milestone.
Red	Service overdue

Action Steps

1. Tap the alert notification
2. Review required maintenance tasks
3. Follow guided instructions by taping the icon
4. Tap **Reset** after completion

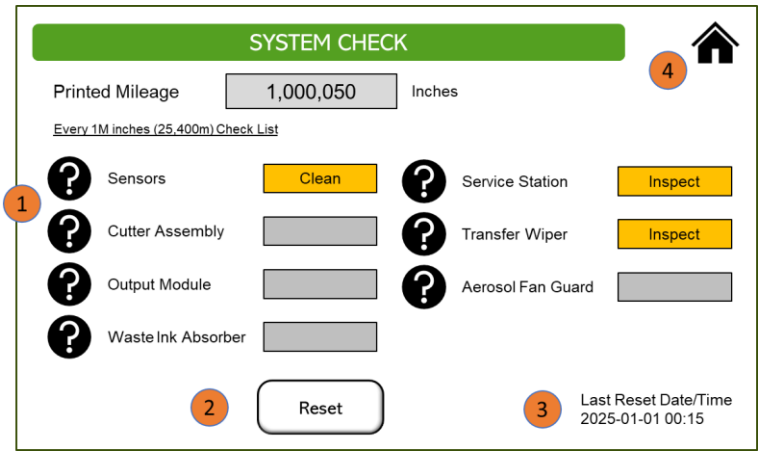

1. Tap on the icon for the video
2. Reset button
3. Display the last reset date/time
4. Return to HOME menu

Self-Help Video Library

Accessible via the **icon**, this feature provides:

- Step-by-step maintenance guides
- Troubleshooting procedures
- Operational tutorials

Troubleshooting (Overview)

When issues occur:

1. Observe the error code displayed
2. Tap the **icon** for recovery steps
3. Perform corrective action
4. Resume printing using **Continue**

For persistent issues:

- Export diagnostic logs
- Contact technical support

Printer Maintenance

Guidelines for Preventive Maintenance

Recommended maintenance depends on the most frequently used print mode. Refer to the respective table below. Inspect means to check the condition and replace if necessary.

Note that these are general guidelines for preventive maintenance. As operating conditions for your printer may differ, adjust your maintenance schedule accordingly.

To remind the user of preventive maintenance, the touchscreen will display an alert as the printer approaches its service intervals.

Maintenance schedule: For more than 80% Roll to Roll Operation	Spare part P/N	Every 1M inches (25,400 m)	Every 2.5M inches (63,500 m)	Every 5M inches (122,500 m)
Sensors		Clean		
Cutter Assembly	22950		Inspect	Replace
Output Module	23041		Inspect	Replace
Service Station	22929	Inspect	Replace	
Transfer Roller Assembly*	22964	Inspect	Replace	
Aerosol Fan Guard	22943		Replace	
Waste Ink Absorber	22936			Inspect

Maintenance schedule: For more than 80% Roll to Cut/Print and Present Operation	Spare part P/N	Every 1M inches (25,400 m)	Every 2.5M inches (63,500 m)	Every 5M inches (122,500 m)
Sensors		Clean		
Cutter Assembly	22950	Inspect		
Output Module	23041	Inspect		

Service Station	22929	Replace		
Transfer Roller Assembly*	22964	Replace		
Aerosol Fan Guard	22943		Replace	
Waste Ink Absorber	22936			Inspect

*The transfer wiper assembly is part of the service station and may not be available as a separate replacement for your printer. If it is not available, follow the service station's maintenance schedule.

Replacing an Ink Cartridge

WARNING: Do not open the front cover if the touch panel displays "Servicing Printhead". Wait for the servicing to be completed first.

1. Open the front cover of the printer.

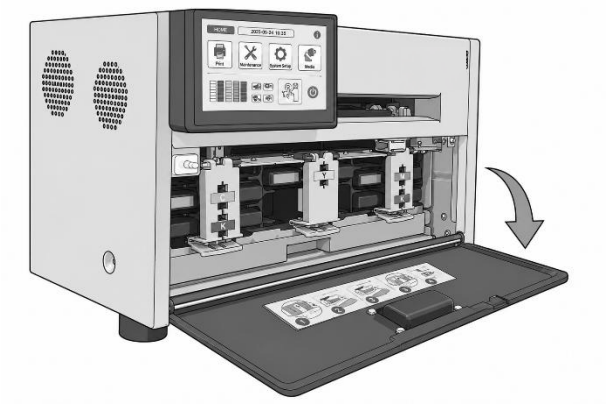

2. Open the latch and remove the empty ink cartridge.

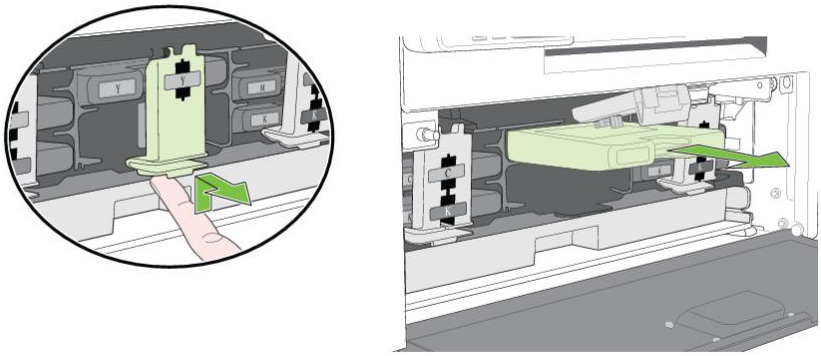

3. Insert the new cartridge and close the latch.

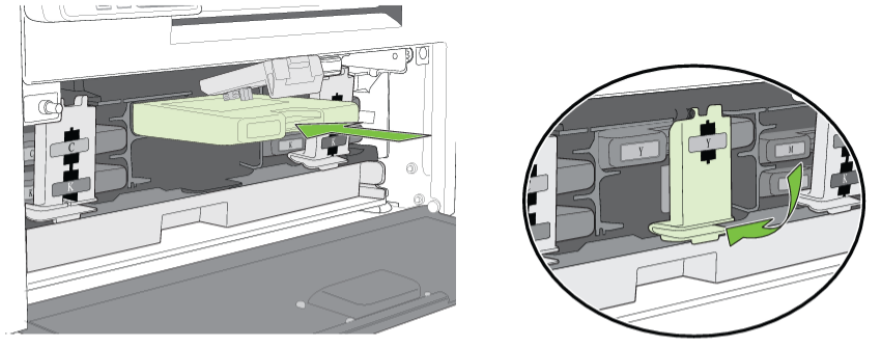

4. Close the front cover.

NOTE: Dispose of the empty ink cartridge according to local regulations.

Cleaning the Printhead

The printer provides three automated cleaning cycles for the printhead: **Light, Medium, and Heavy.** Always start with the Light cleaning cycle and proceed to the next level only if print quality does not improve.

1. On the touchscreen **HOME** page, tap on **Maintenance**.
2. On the **maintenance** page, tap on either **Light, Medium, or Heavy clean**.
3. Upon completion of the cleaning, try printing again.

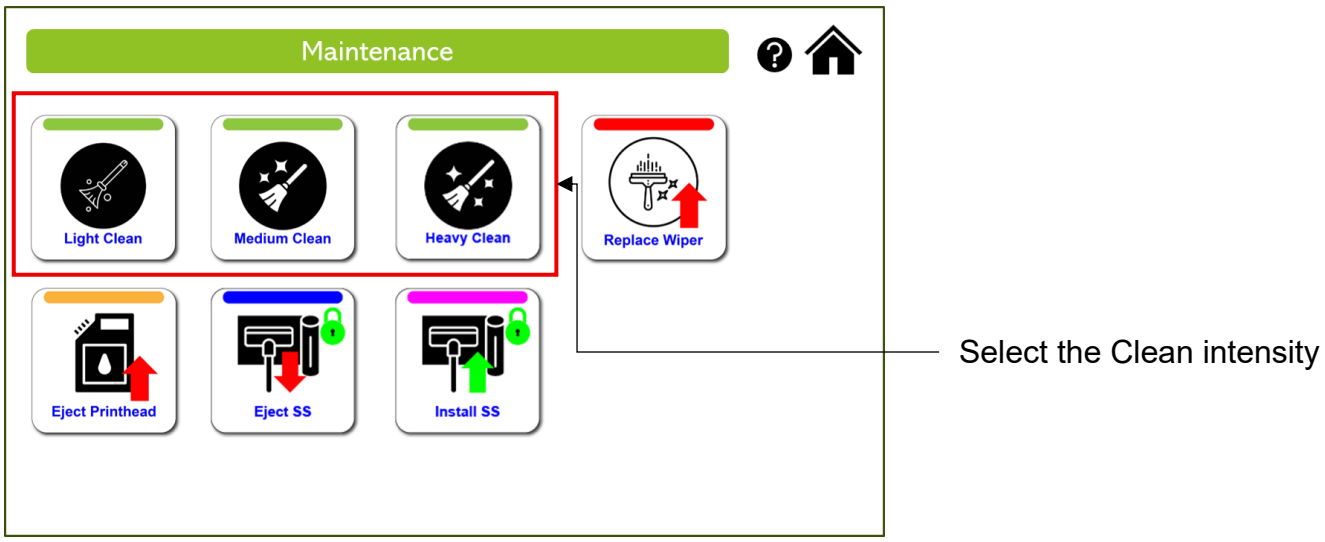

Replacing the Printhead

Make sure all the ink cartridges are installed before replacing the printhead.

1. Open the printer top cover.
2. On the touchscreen **HOME** page, tap **Maintenance**.
3. On the **Maintenance** page, tap on Eject Printhead

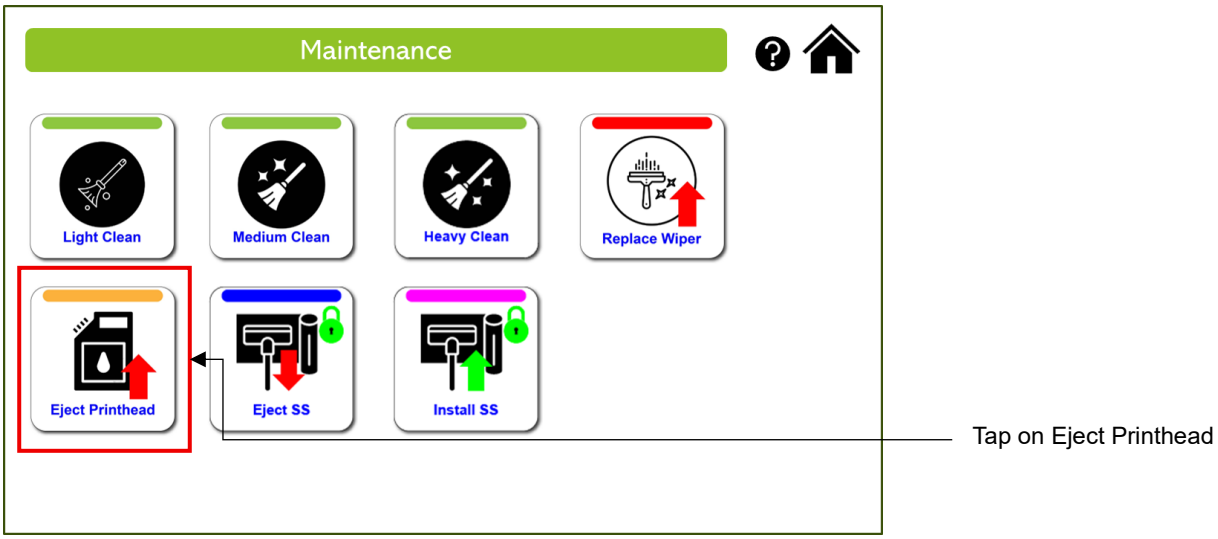

4. Wait for the printhead latch to be released. It will pop open. DO NOT force it open, as it may break. When the printhead latch is released, fully open it.

5. Hold the printhead by the handle and push it toward the printhead latch. Once the printhead is released, lift it out of the printer.

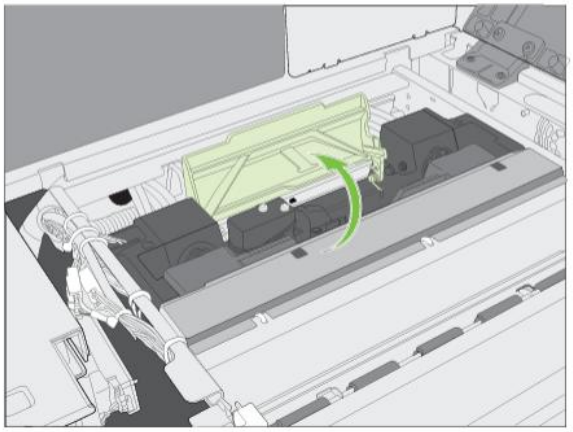

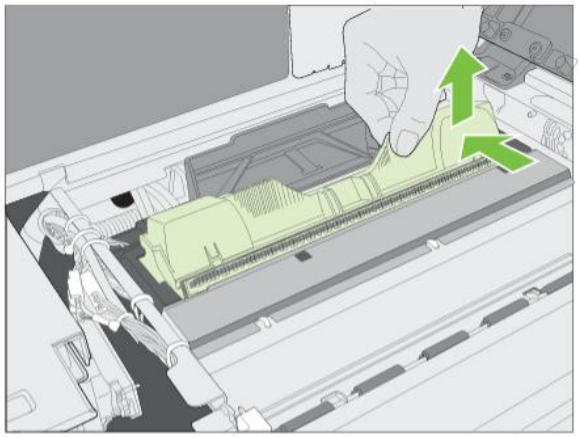

NOTE: Dispose of the older printhead in accordance with local regulations.

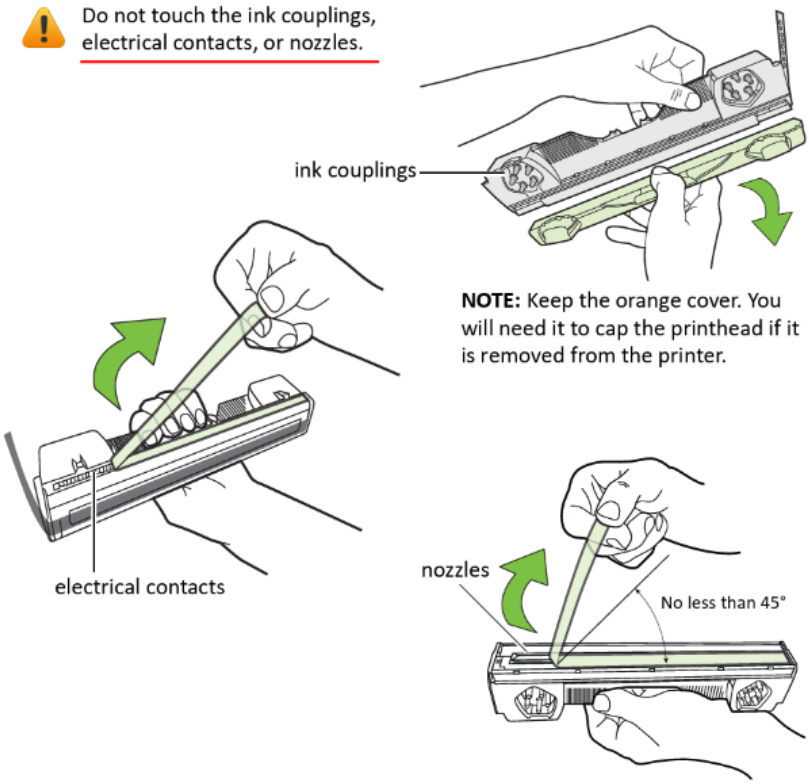

6. Remove the new printhead from its packaging. Do not touch the ink couplings, electrical contacts, or nozzles.

NOTE: Keep the orange cover. You will need it to cap the printhead if it is removed from the printer.

7. Slide the printhead into the slot. Push it toward the front of the printer. It should snap into place.

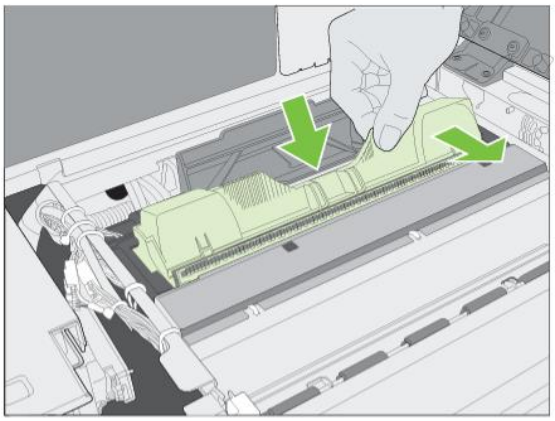

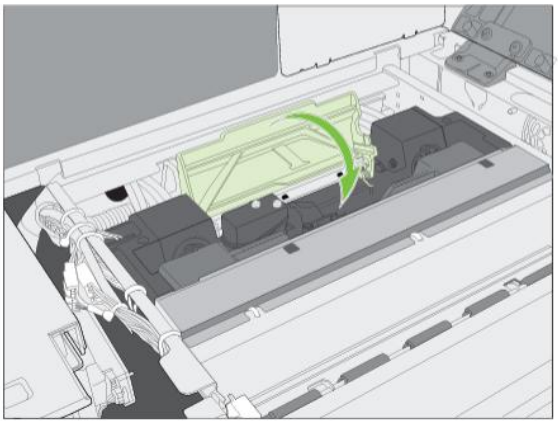

8. Close the printhead latch.

9. Check that ink is flowing through the tubes on both sides of the printhead.

10. Close the top cover.

Opening/Closing the Clamshell

In the following procedures, you need to open the clamshell in order to access the areas inside the printer.

Opening the Clamshell

WARNING: Do not open the top cover if the touch panel displays "Servicing Printhead". Wait for the servicing to be completed first.

1. Open the top cover.

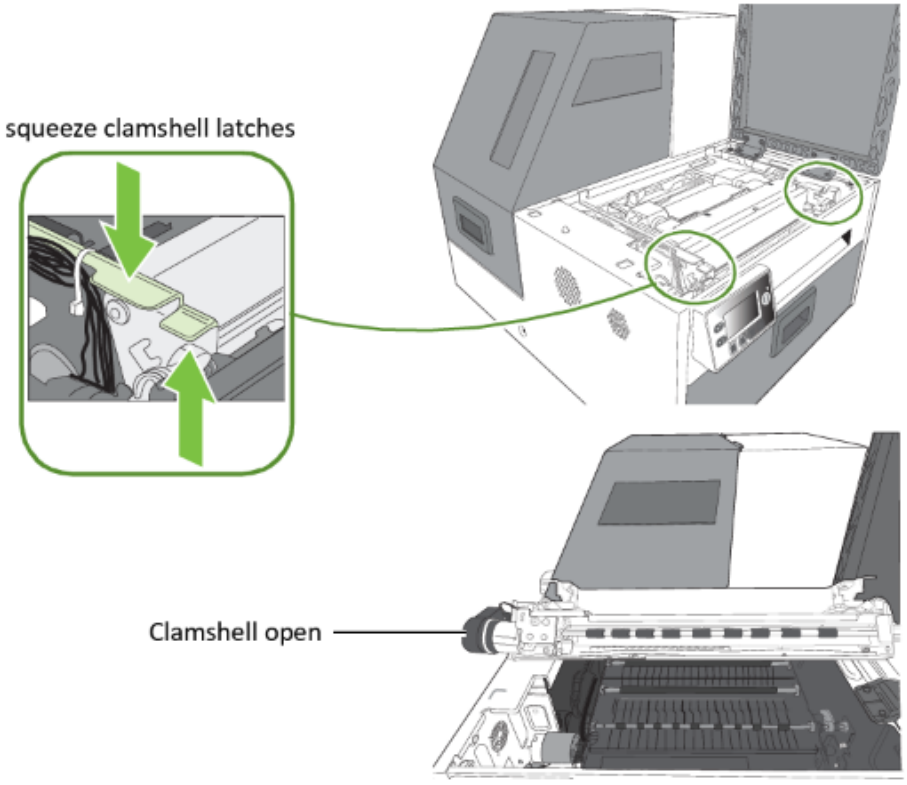

2. Squeeze the latches on either side of the clamshell and open the clamshell to its highest position.

Closing the Clamshell

Squeeze and hold the clamshell latches while you gently lower the clamshell back into place.

WARNING: Do not allow the clamshell to drop when closing it.

Cleaning Debris from the Cutting Zone

Clear all debris from the cutting zone to avoid contaminating the print zone, especially fine dust particles.

1. Open the top cover.
2. Vacuum any debris from the cutting zone (shown in green)
3. Open the clamshell and also check below the cutting zone, at the bottom of the printer and in front of the ink cartridges.

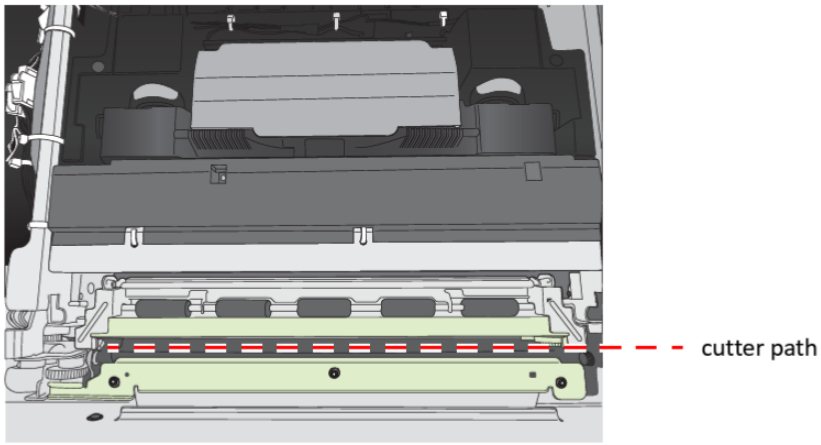

Cleaning the Sensors

Always keep the media path clean, as accumulated dust can affect printing.

1. Open the clamshell to its highest position.
2. Vacuum any dust or debris from the sensors. Use the rollers to help you locate the sensors as shown.
3. Clean ink from the exit sensor if it looks dull:
   a. Fold a lint-free cloth to form a tip and lightly moisten with de-ionized water. Insert it in the opening to clean the exit sensor.
   b. Repeat with a clean part of the cloth if necessary.
   c. Let the sensor dry before continuing.
4. Close the clamshell and top cover.

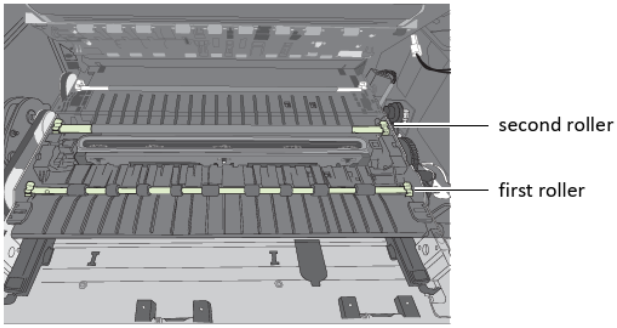

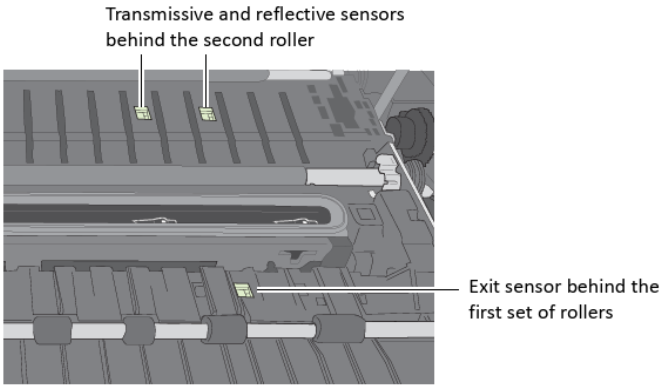

The locations of the sensors

WARNING: Do not vacuum the printhead.

Replacing the Output Module/Cutter Assembly

Tools:

- Nitrile powder-free gloves
- Small flat-head screwdriver
- T10 Trox driver
- Scissors or cutter (for cable ties)
- Cable ties

Keep the cutting zone free from debris. Check cut labels to ensure the cuts have clean edges and replace the cutter assembly as needed.

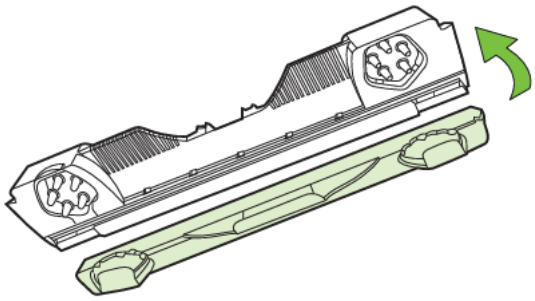

NOTE: Before you begin, remove the printhead and cap it with the orange protective cover.

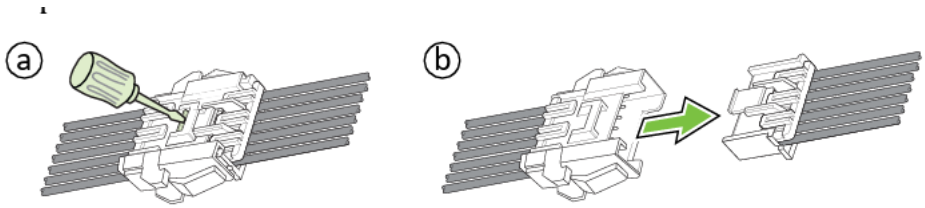

Removal

1. Power down the printer. Also, turn off the Power switch at the back of the printer.
2. Open the clamshell to its highest position.
3. Locate the wire harness connector (labeled P107) for the output module. Use the small flat-head screwdriver to release and separate the connector.
4. Carefully cut the cable ties securing the cables to the left side of the clamshell.

WARNING: Be careful not to cut any of the cables.

5. Use a T10 Torx driver to remove the four screws securing the output module. Remove the outer screws first.

6. Carefully remove the output module from the clamshell. There is a black cable looped across the bottom of the output module and ease the output module out. The cutter assembly is not visible.

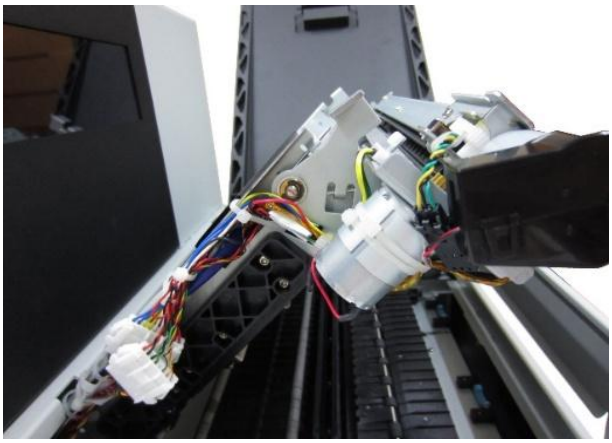

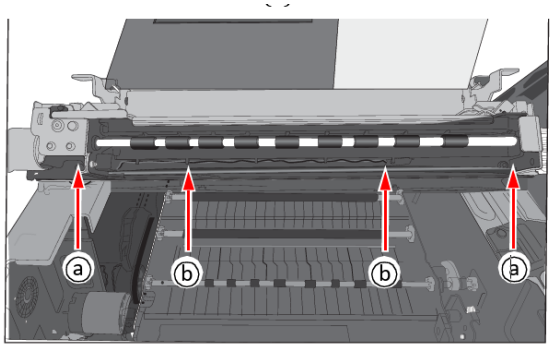

Replace Cutter Assembly

If replacing the cutter assembly, continue with the following steps.

1. Use a small flat-head screwdriver to release the wire harness connector for the cutter assembly (label CUTTER MODULE) and separate it.

2. Remove the two screws (a) securing the cutter assembly and remove the assembly.

3. Line up the mounting holes and guides on the new cutter assembly and the front of the clamshell. Insert and tighten the screws to secure the assembly.

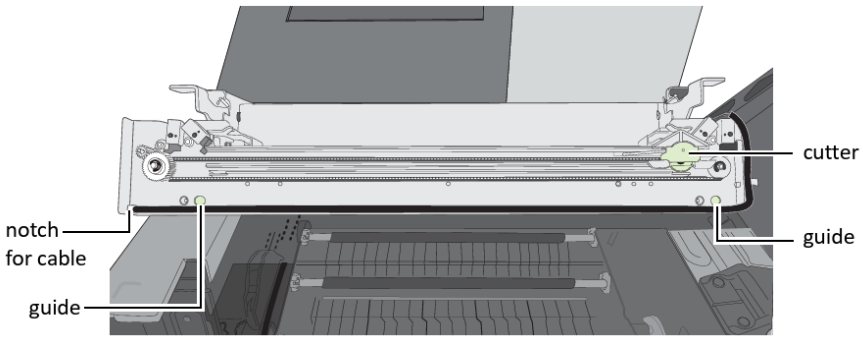

4. Make sure the cutter is at the side of the cutter assembly.

5. Reattached the wire harness connector (label CUTTER MODULE) for the cutter assembly at the side of the clamshell.

WARNING: Be sure to reattach the correct connector for the cutter assembly.

6. Gently pull the black cable out of the notches at the bottom corners of the cutter assembly so that the output module can be installed.

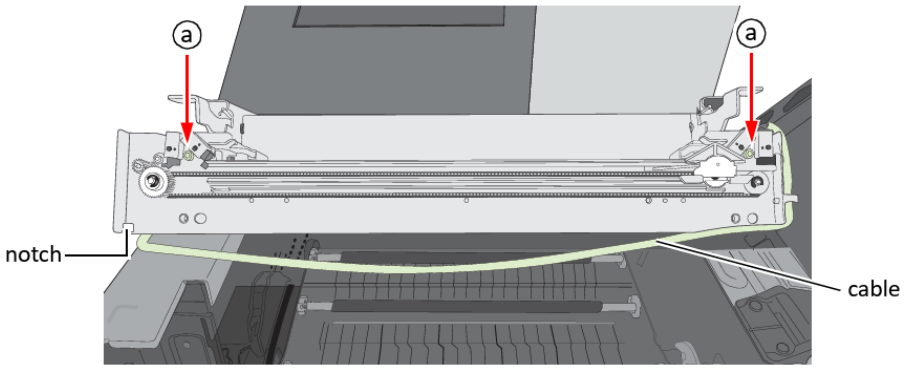

Installation

1. Seat the output module on the cutter assembly, aligning the mounting holes for the screws.

2. Loop the black cable over the bottom of the output module, pushing it back into the notches at the corners of the cutter assembly.

3. Replace the four screws securing the output module. Replace the two screws in the center (b) before replacing the outer ones.

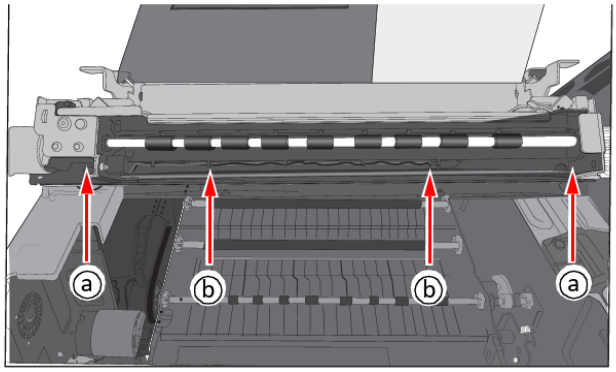

4. Reattach the wire harness connector (labeled P107) for the output module at the side of the clamshell.

WARNING: Be sure to reattach the correct connector for the output module.

5. Tidy the cables at the side of the clamshell and secure with cable ties.

6. Carefully close the clamshell while checking that none of the cables will get caught or pinched.

7. Close the top cover.

Replacing the Service Station

NOTE: Before you begin, remove the printhead and cap it with the orange protective cover.

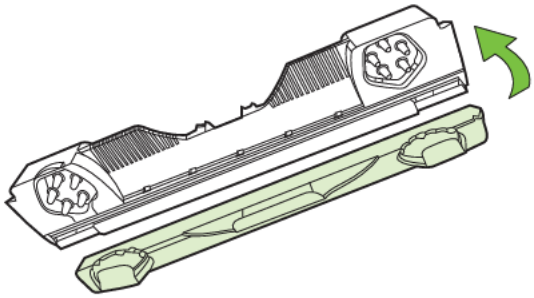

Tools:

- Nitrile powder-free gloves
- T20 Torx driver
- Disposable towels

Removal

1. Open the clamshell to its highest position.
2. On the touch panel HOME page, tap on Maintenance.
3. On the Maintenance page, tap on Eject Service Station.
4. Wait for the printer to eject the Service Station.

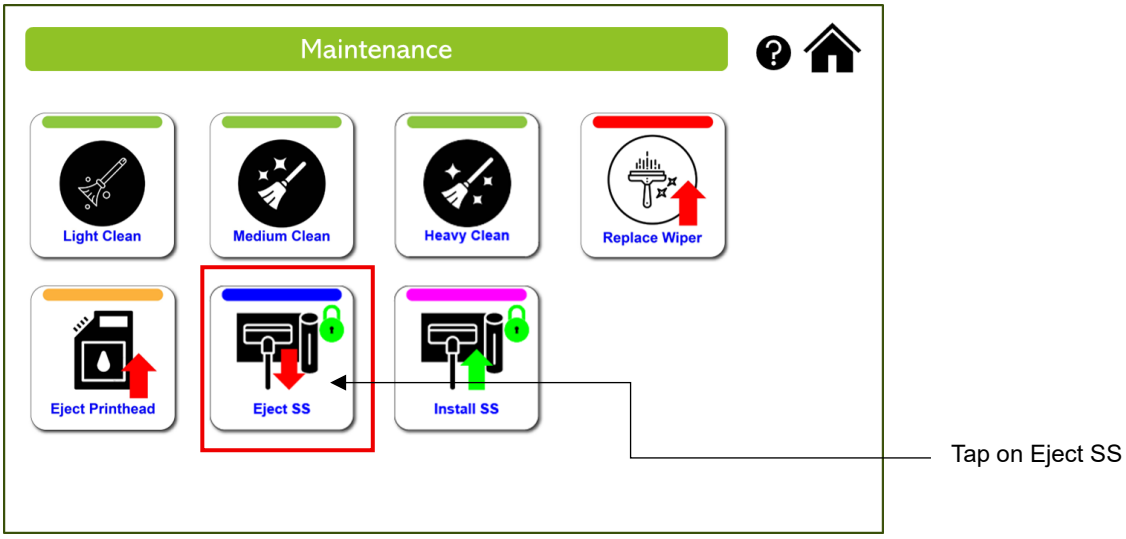

5. Press the Power button on the touch panel to turn off the printer. Also, turn off the Power switch at the back of the printer.

6. Remove the front panel:
   a. Use a T20 Torx driver to remove the four screws (label 1 to 4) securing the front panel.
   b. Release the font panel and disconnect the two cables behind the touch panel.

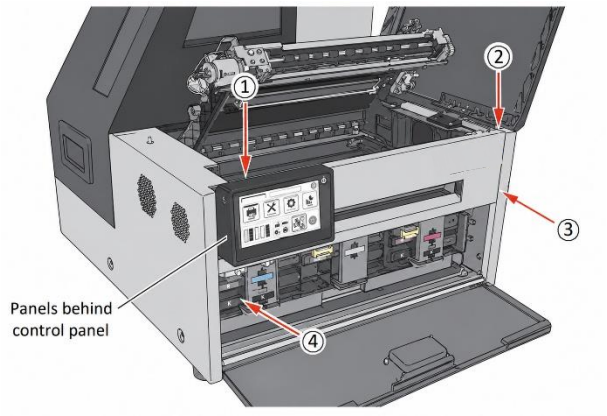

7. Pull the service station forward until you can disconnect the flex cable to the wiper motor. Loosen the clip on the connector to release the flex cable.

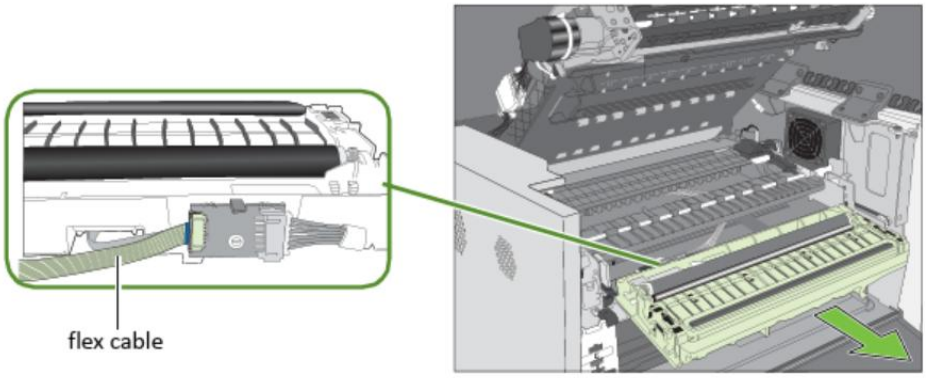

WARNING: Ensure that the flex cable does not come into contact with any metallic surface. If it touches metal while the printer is accidentally turned on, it will short the controller circuit and damage the printer.

WARNING: Take care when handling the service station. Ink may spill when you tilt the service station.

NOTE: Dispose of the old service station in accordance with local regulations.

Installation

8. Insert the flex cable into the connector on the new service station and push in the clip to secure it.

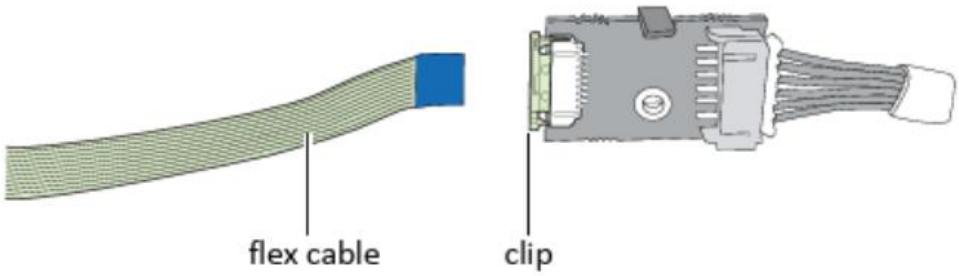

9. Carefully align the service station with the guide rails and slide it into the print engine. Push it in by applying even pressure near the edges to ensure that it goes in straight. Check the alignment: the cap on the service station must be parallel with the edge of the platen as shown. If the service station is skewed sideways, pull it out and reinsert.

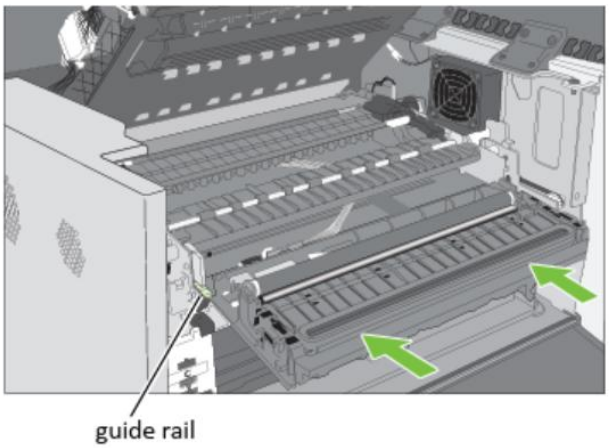

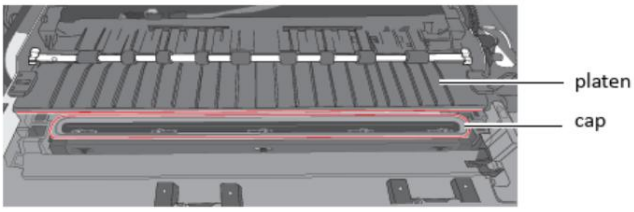

10. Continue pushing the service station while you manually rotate the positioning gear backward to move it all the way into the print engine.

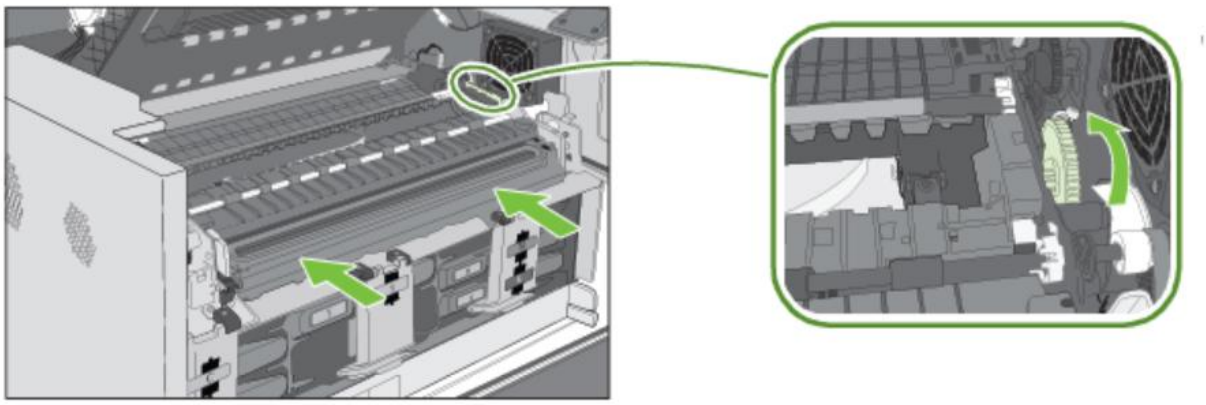

11. Reinstall the front panel: Reconnect the two cables to the front panel and replace the screws.

12. Close the clamshell and the covers.

13. Turn the printer on.

14. On the touch panel HOME page, tap on Maintenance.

15. On the Maintenance page, tap install service station.

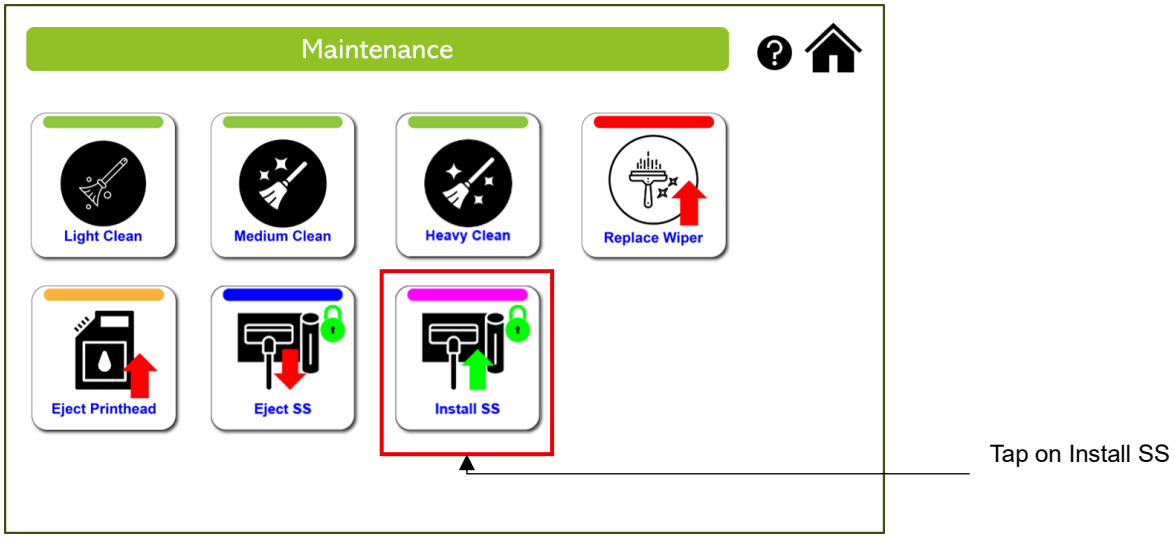

Replace the Transfer Wiper

1. On the touchscreen **HOME** page, tap on **Maintenance**.

2. On the **Maintenance** page, tap on the **Eject** wiper.

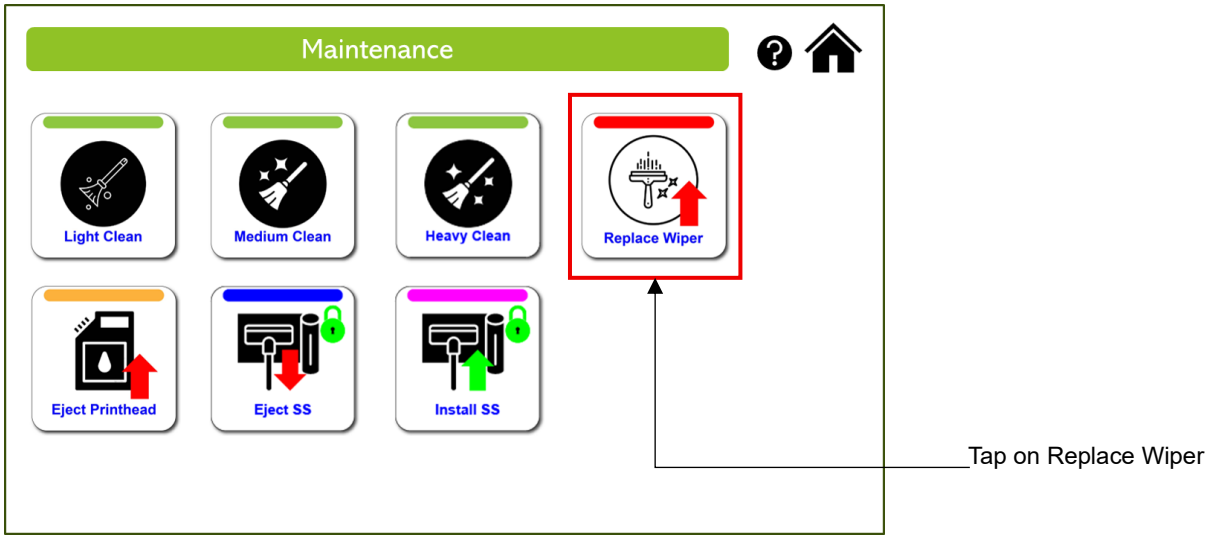

3. Wait for the service station to position the wiper for removal.

4. Open the clamshell to the highest position.

5. Unlatch the 2 side latches that are holding the wiper roller in place.

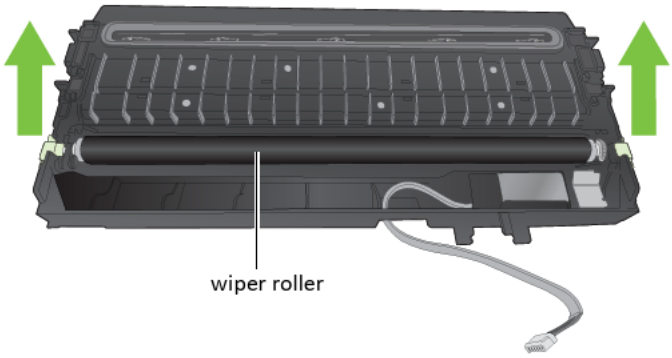

6. Replace the wiper roller.
7. Relatch the 2 side latches to secure the wiper roller in place.
8. Click on DONE on the touch panel.
9. Close the clamshell.

Replacing the Aerosol Fan Filter

Tools:

- Nitrile powder-free gloves

1. Open the clamshell to its highest position.
2. Insert the tip of a flat-head screwdriver into the slot at the corner of the aerosol fan guard and pry the cover off.

3. Do the same with the new aerosol fan guard, and remove the filter.

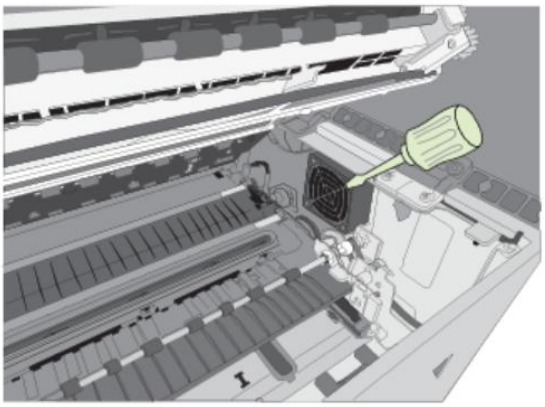

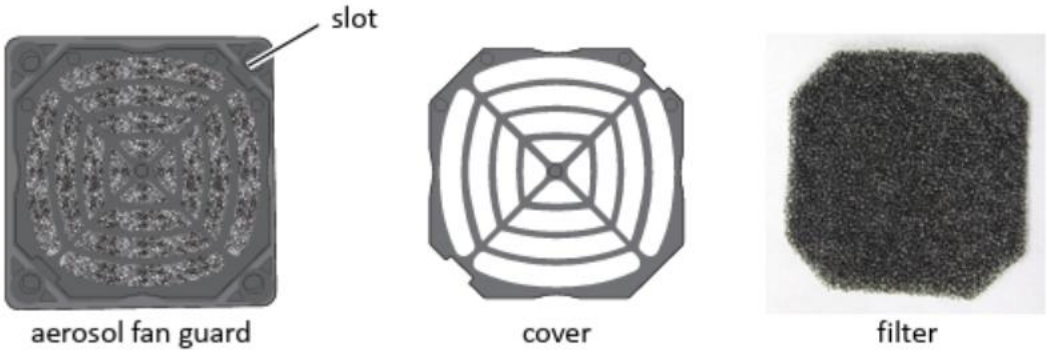

4. Snap the cover back into place on the aerosol fan guard.
5. Close the clamshell and top cover.

NOTE: To replace the entire aerosol fan guard, carefully remove the four screws at the corners of the fan guard. Align the new guard with the mounting holes and replace the screws

Replacing the Waste Ink Absorber

Tools:

- Nitrile powder-free gloves

1. Open the front cover of the printer.

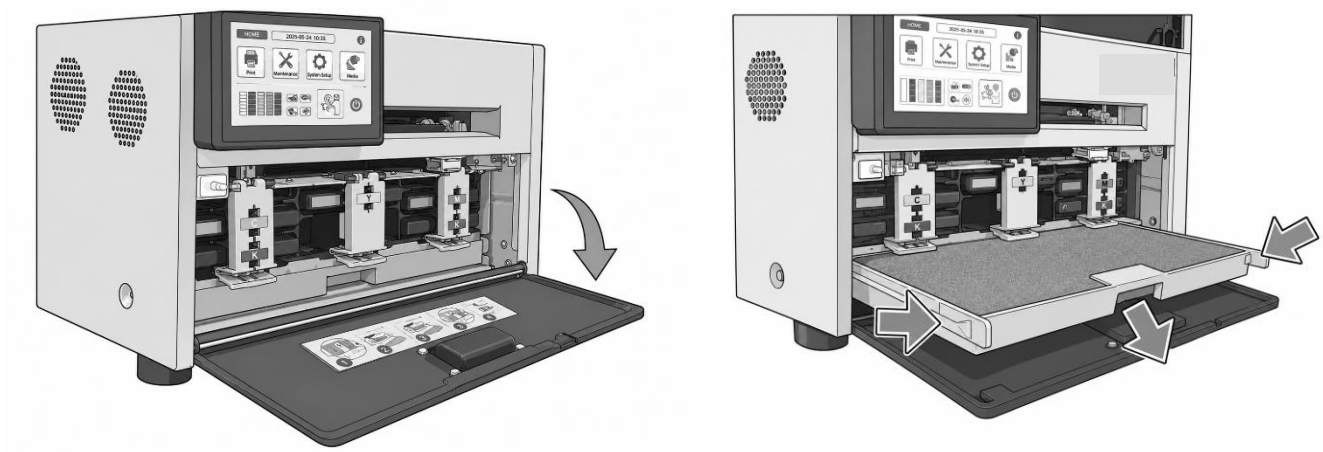

2. Squeeze the latches on both sides of the waste ink tray and pull it out.
3. Remove the waste ink absorber and replace it with a new one.
4. Slide the waste tray into the printer. Push it in till it clicks into place.
5. Close the front cover

NOTE: Take care when replacing the waste ink absorber to avoid straining hands and clothing. Dispose of the used ink absorber according to local regulations.

Troubleshooting

If Error Messages Appear

If error messages appear on the touch panel, refer to the following table for the solution.

Error Message	Possible Cause	Solution
Clamshell	The clamshell is open. The clamshell sensor is damaged.	Close the clamshell. Contact Technical Support for part replacement.
End of Roll	End-of-roll is detected.	Load a new roll or stack of labels.
Front Cover	The front cover is open. The front cover sensor is damaged	Close the front cover. Contact Technical Support for part replacement.
Jam Cutter	Debris in the cutting zone. The cutter has reached the end of its life, or the blade is blunt.	1. Turn off the printer and unplug the power cable. 2. Clean any debris from the cutting zone. See Cleaning Debris from the Cutting Zone for details. Contact Technical Support for part replacement.
Jammed Media	The labels are jammed or cannot feed into the printer. Media used exceeds the maximum thickness of 0.01” (0.3 mm) The transmissive (gap) or reflective (black mark) sensor is dirty or faulty.	Clear the jam and reload the media. See clearing a Media Jam. Clear the jam and replace the media. See choosing label media. Clean the sensor with a lint-free cloth and re-try. If the error persists, contact Technical Support for part replacement.
Low Ink	An ink cartridge is low.	Replace the ink cartridge. Check the ink status icons to see which color is running out.
Mech Error [01]	The printer is not receiving the correct data.	1. Check that the label & image size match, increase or decrease the image size slightly. 2. Cancel the job print (and clear the printer spooler, if needed) and re-try.

		3. If the error persists, contact Technical Support.
Mech Error [code] where [code] > 01	Printer mechanical fault.	Note the error code and contact Technical Support. If Mech Error 2 or Mach Error 3a/3b appears during installation, see Troubleshooting Printer Setup Do not attempt to restart the printer more than 3 times if the same Mech Error appears. Contact Technical Support
Media Cover	The media cover is open. The cover sensor is damaged.	Close the media cover. Contact Technical Support for part replacement.
Missing Ink	The ink cartridge is not installed or is not a genuine ink cartridge from the manufacturer (OEM). The Ink cartridge is not properly installed. The ink cartridge is faulty. The electrical contact is obstructed or dirty. The ink cartridge latch is damaged or cannot be closed properly.	Install a genuine ink cartridge. If the problem persists, contact Technical Support. 1. Remove and re-insert the ink cartridge. 2. Wait 10-15s for detection. If the ink tank remains undetected, repeat the process. 3. If the ink tank remains undetected after the third attempt. Restart the printer and repeat steps (1) & (2). 4. If the problem persists, contact Technical Support. Replace the ink cartridge. Clean contact with a lint-free cloth and re-insert. Contact Technical Support for part replacement.
Missing PH	The printhead is not installed or is not a genuine printhead from the manufacturer (OEM). The printhead is faulty.	Install a genuine printhead. If the problem persists, contact Technical Support. Insert another printhead (or a known-good printhead) and check whether the printer can detect it. If

	The electrical contact is obstructed or dirty.	the problem persists, contact Technical Support. 1. Clean the contact with a lint-free cloth. 2. Re-insert the printhead. If the problem persists, contact Technical Support.
No Media	No media is detected. The media is not properly inserted into the input guide.	Load a new roll of labels. Reload the media.
Wrong Media	Problems with the media.	Load the correct media. (Continuous or gap)
Top Cover	The top cover is opened. The top cover sensor is damaged.	Close the top cover. Contact Technical Support for part replacement.
Out of Ink	An ink cartridge is out of ink.	Replace the ink cartridge. Check the ink status icons for the empty color.

Troubleshoot Printer Setup

Possible Cause	Solution
The service station is jammed.	Ensure that the cardboard is removed from inside the printer.
The service station is tilted during shipment	1. Turn off the printer: Press the Power button on the touch panel. When the LCD display turns off, turn off the Power switch at the back of the printer. 2. Open the clamshell to its highest position 3. Rotate the positioning gear forward to eject the service station. 4. Push the service station back in, making sure it goes in straight. Check the alignment: the cap on the service station must be parallel with the edge of the platen. 5. Continue pushing the service station while you manually rotate the positioning gear backward to move the service station all the way into the print engine. 6. Close the clamshell and turn on the printer.

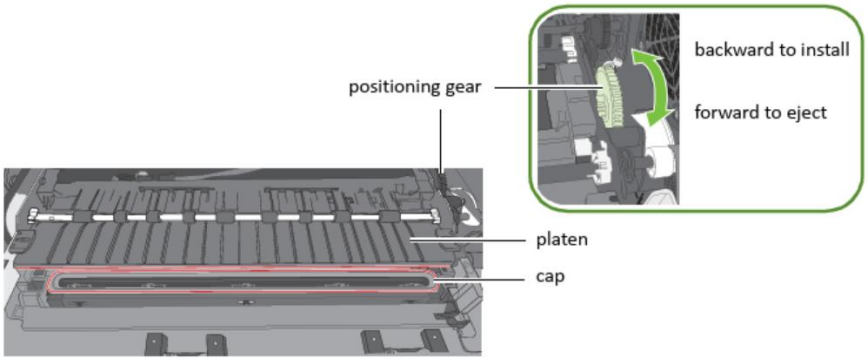

Poor Print Quality or Incorrect Printout

Problem	Possible Cause	Solution
Long stripes of missing print or vertical light streaks on several labels	Ink nozzles are clogged.	See Clearing Clogged Ink Nozzles.
A printed barcode cannot be scanned	The media is not suitable for use in this printer. The barcode is too small. Ink nozzles are clogged, and the barcode did not print properly.	Replace the media. See Choosing Label Media. Adjust the size of the barcode. See Clearing Clogged Ink Nozzles.
Ink is smudged on the labels	The media is not suitable for use in this printer. Accumulated ink in the print zone. The media is curled and touching the printhead.	Replace the media. See Choosing Label Media. 1. Open the clamshell and inspect the print zone. 2. Lightly moisten a lint-free cloth with de-ionized water and gently clean off any ink from the print zone and printhead. 3. Close the clamshell. 1. Replace the media. See Choosing Label Media. 2. If the problem persists, contact Technical Support. 1. On the EWS Advanced Settings page, set the printer to retract

	The media is curled by the unwinder when the printer is idle for some time. The service station needs to be replaced. Too much ink is laid (large areas of color in the image).	the media when it is idle for more than 10 minutes. 2. If the problem persists, contact Technical Support. See Replacing the Service Station. Adjust the amount of ink by adjusting the image's color settings in Printing Preferences (Color Adjustment tab).
Mixed or muddy colors	The printhead is dirty. Color ink cartridges are dirty.	1. Run a heavy cleaning cycle from the touch panel. On the HOME page, tap on Maintenance. 2. On the Maintenance page, tap on Heavy Clean. 3. If print quality shows some improvement, repeat Heavy cleaning until the print quality is satisfactory. 4. If print quality does not improve, open the clamshell and check for patches of wet ink on the printhead. 5. Use a lint-free cloth to absorb the ink. Avoid touching the neighboring nozzles. 6. Check the print quality. Run a heavy cleaning cycle if necessary. 1. Remove the yellow (Y) ink cartridge from the printer. 2. Check the color of the ink through the ink level prism. 3. If the ink color is very dark (black) instead of yellow or iodine, replace all three-color ink cartridges. 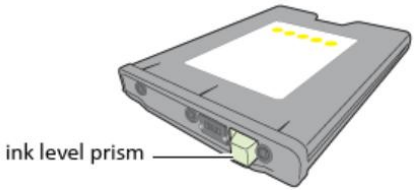

Position of the printed image drifts vertically	The top-of-form position needs adjustment. The media is not loaded properly. The media is not suitable for use in this printer. The printer is unable to correctly detect the inter-label gap or black mark.	Adjust the Top of Form offset from the printer driver. See Adjust Alignment for Printing. Reload the media. See Loading Media. Replace the media. See Choosing Label Media. Adjust the sensitivity of the sensors. See Adjusting Sensor Sensitivity.
Mis-registration or labels are skipped	Media settings do not match the media loaded in the printer. The media does not meet the specifications. The printer is unable to correctly detect the inter-label gap or the black mark.	Make sure the settings are correct for the media (e.g., media size and orientation). See Choosing Label Media for the media specifications. 1. Clean the sensors. See Cleaning the Sensors. 2. If the problem persists, adjust the sensitivity of the sensors. See Adjusting Sensor Sensitivity.
Labels are skipped when printing Roll to Roll on media with a black mark	The printer is unable to detect the inter-label black mark correctly.	Adjust the media size in the printer driver: reduce the height by 0.1” (3 mm).

Other Printing Problems

Problem	Possible Cause	Solution
The printer feeds media without printing, then displays "Wrong media" on the touch screen.	Media settings do not match the media loaded in the printer. The media does not meet the specifications. The printer is unable to correctly detect the inter-label gap or the black mark.	Make sure the Media Layout setting (gap, black mark, or continuous) in the printer driver matches the media used. See Choosing Label Media for the media specifications. 1. Clean the sensors. See Cleaning the Sensors. 2. If the problem persists, adjust the sensor sensitivity. See Adjusting Sensor Sensitivity.

Labels are not cut.	The exit sensor needs cleaning.	Clean the exit sensor. See Cleaning the Sensors.
Changes made using the control panel did not take effect.	The changes were not saved properly due to a user or hardware error.	1. Try changing the parameter again. 2. If the problem persists, reset the printer.1 Try changing the parameter again. 3. If the problem persists, contact Technical Support.
The touch screen does not respond to touch	The touch screen may be damaged.	The touch screen may need to be replaced. Contact Technical Support.
Nothing is displayed on the touch screen, and the printer freezes.	Internal electronic or firmware failure.	Contact Technical Support.
A white band appears at the TOF when printing in Sheet Per Cut and Print and Present mode with continuous media	The continuous media gap is set to a non-zero value	Make sure the continuous media gap in the EWS is set to zero.

Clearing a Media Jam

1. Open the media cover.
2. Cut off the jammed media from the media roll.
3. Open the clamshell to its highest position.
4. Remove the jammed media from inside the printer.
5. Close the clamshell and top cover.
6. Reload the media.

Clearing Clogged Ink Nozzles

Long stripes of missing print or vertical light streaks on several labels may indicate clogged ink nozzles. Follow the procedure below to clear the ink nozzles.

After each step, print and check the print quality. Proceed to the next step only if the problem persists.

1. Open the clamshell and inspect the print zone (the area below the clamshell). Vacuum any dust or debris from the area.

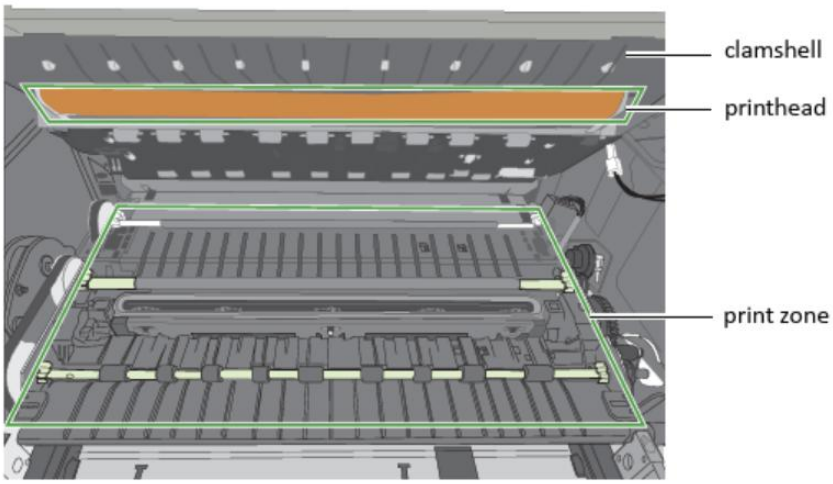

NOTE: Do not clean the printhead at this point.

2. On the touch panel HOME page, tap on Maintenance.

3. On the Maintenance page, tap on the Light Clean icon.

   a. If print quality shows some improvement, repeat Normal cleaning until the print quality is satisfactory.

   b. If print quality does not improve, continue with step 4.

4. Run the Medium Clean sequence

   a. If print quality shows some improvement, repeat Normal cleaning until the print quality is satisfactory.

   b. If print quality does not improve, continue with step 5.

5. Run the Heavy Clean sequence

   a. If print quality shows some improvement, repeat Normal cleaning until the print quality is satisfactory.

   b. If print quality does not improve, continue with step 6.

6. Open the clamshell and inspect the printhead. Lightly moisten a lint-free cloth with de-ionized water and gently clean off any ink. If no ink is visible, gently wipe the ink nozzles from one side to the other.

7. Change the printhead.

8. Contact Technical Support.

Adjusting Sensor Sensitivity

Adjust the sensor sensitivity if you encounter the following problems:

- The printer keeps feeding media and does not print. This may be because the printer is unable to detect the gap or black mark between labels, and the sensor sensitivity needs to be increased.
- The printer does not position the media correctly for printing because it detects a “false” gap or mark. In this case, the sensor sensitivity needs to be decreased.

Generally, sensor sensitivity may need to be increased for thicker liners and decreased for thinner ones.

1. On the touchscreen **HOME** page, tap on **Setup**
2. On the **Setup** page, tap on Security and enter the Administrator PIN to unlock the Advanced Setup page.
3. Return to the **Setup** page, tap on **Setup**.
4. On the **Advanced Setup** page, enable access to EWS.
5. From the laptop/PC that is connected to the printer, launch the EWS. See "Adjusting Gap/Mark Sensor Thresholds" for instructions on adjusting the threshold.

Appendix

System Requirements

The computer used to print must meet the minimum requirements listed below.

Processor	Intel® Core™2 and above
Operating system	Supported operating systems with the latest updates: • Windows 11 • Windows 10 (32- and 64-bit) • Windows 8 (32- and 64-bit) • Windows 7 (32- and 64-bit) with Service Pack 1 • Windows Server 2008 R2 (32- and 64-bit) with Service Pack 1
System	.NET Framework 3.5
Memory	Minimum: 2GB
Available disk space	Minimum: 1GB
Web browser	• Internet Explorer • Microsoft Edge • Google Chrome • Mozilla Firefox

.NET Framework installation on Windows Server 2008 R2

After installing the .NET Framework on Windows Server 2008 R2, follow the steps below to activate the features.

1. On the Windows Start menu, select Administrative Tools > Server Manager.

2. Click Features to view the status of installed features. Click Add Features.

3. Select the .NET Framework 3.5.1 entry and click Next.
4. Confirm the installation by clicking Install.
5. When installation is complete, click Close. You may be prompted to restart the computer.

Printer Interface (GPIO) Specifications

The Printer Electrical Signal Interface and Protocol is designed to coordinate label printing with an external process within a production workflow. Using this protocol, the printer (Device A) receives a print job but will not print until it receives a signal from an external device (Device B).

The following scenario illustrates how this could be used:

1. A box on a conveyor arrives at a workstation. A barcode is read and triggers a message to a computer.

2. The computer sends a print job (probably with some variable data) to the printer.

3. The box reaches the next station on the conveyor and triggers a signal (e.g. by a footswitch or automatically by a sensor). The printer starts printing when the signal is received.

The electrical signal to initiate printing is received at the printer's GPIO port. The handshaking protocol is as follows:

- The printer signals it is ready to print by pulling up the Print Job Ready signal from low to high.
- Device B signals readiness by pulling up the Ready signal. This must remain high for at least 50 ms. When the Ready signal is pulled down while the printer is printing, it will pause and behave exactly as if the user pressed the Pause button on the control panel. The printer remains in Pause mode until the Ready signal is pulled up again for at least 50ms.
- The printer prints and pulls down the signal when printing is completed.
- No printing occurs whenever the Printer Error signal is pulled low.

Note: The GPIO port is not intended for transmitting data to print, but only for sending signals to interrupt printing during normal printer operation via Ethernet or USB.

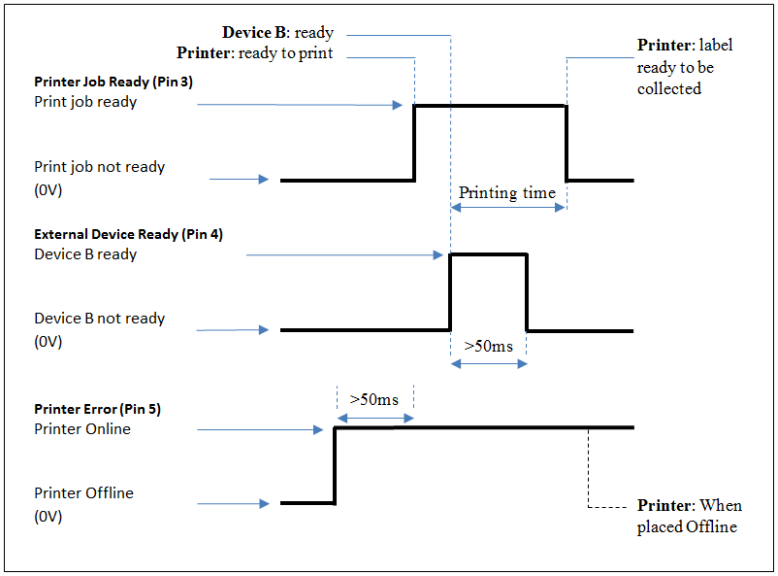

Pin	Signal Description
1	HIGH (3.3V)
2	ADC 5
3	Print job ready (output) (GPIO A25)
4	External device ready (input) (GPIO D04)
5	Printer error (Output) (GPIO D08)
6	LOW (0 V)
7	NC
8	NC
9	NC

	## FCC Statement **NOTE**: This equipment has been tested and found to comply with the limits for a Class A digital device, pursuant to Part 15 of the FCC Rules. These limits are designed to provide reasonable protection against harmful interference when the equipment is operated in a commercial environment. This equipment generates, uses, and can radiate radio frequency energy and, if not installed and used in accordance with the instruction manual, may cause harmful interference to radio communications. Operation of this equipment in a residential area is likely to cause harmful interference in which case the user will be required to correct the interference at their own expense. **NOTE**: Any changes or modifications to this equipment which are not expressly approved by the manufacturer could void the user's authority to operate this equipment.
	## CE Conformity For customers in Europe the CE mark indicates that this product complies with the European requirements for safety, health, environment and customer protection. This product complies with following European directives: Low Voltage Directive 2006/95/EC, EMC Directive 2004/108/EC, WEEE Directive 2002/96/EC and RoHS Directive 2011/65/EU.
	## Waste Electrical and Electronic Equipment Directive This symbol on the product or on its packaging indicates that this product should be separately disposed of, and not together with other unsorted municipal household waste. Instead, it is your responsibility to dispose of your waste equipment by handing it over to a designated collection point for the recycling of waste electrical and electronic equipment. The separate collection and recycling of waste equipment at the time of disposal will help to conserve natural resources and ensure that it is recycled in a manner that protects human health and the environment, through controlled treatment of possible hazardous substances that may exist. For more information about where you can drop off equipment for recycling, please contact your local city office, your household waste disposal service or the dealer where you purchased the product.

Technical Support

For technical questions or support issues, contact Afinia Label Technical Support:

US:
PH: 952-556-1608
support@afinia.com
www.afinialabel.com/support

UK:
PH: +44 (0) 845 250 7949
support@afinia.co.uk
www.afinialabel.com/support